ORDER NO. GAD8608606C2

Service Manual

Radio Cassette

Portable Stereo Component System

RX-C53L

(Black)

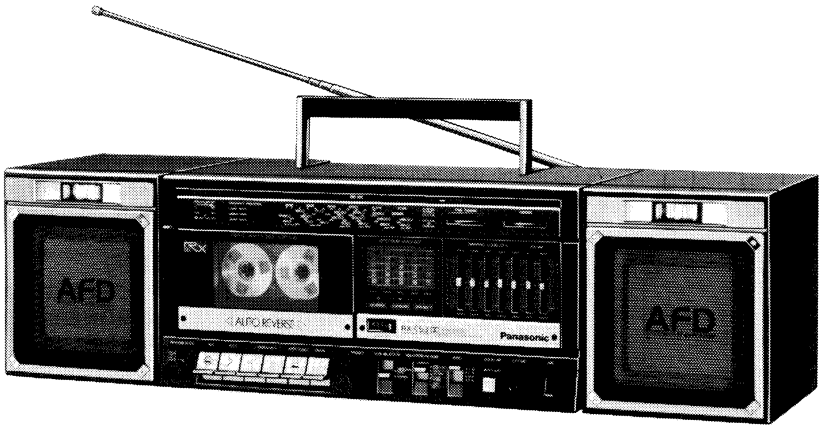

This is the Service Manual for the following areas.

Z ···For all European areas except United Kingdom, F.R. Germany, France, Italy and Finland.

E ···For United Kingdom.

F ···For France.

G ···For F.R. Germany.

RX-C53F MECHANISM SERIES

■ SPECIFICATIONS

General:

Power Requirement:	AC; Z F G ...220V, 50Hz E .....240V, 50Hz Battery; 12V (Eight "D" Size Flashlight Batteries) (Panasonic UM-1 or equivalent) Car battery; with optional car adaptor RP-952
Power Consumption:	37W...(AC only)
Power Output:	20W (10W×2)....MPO 15W (7.5W×2)...RMS (max.)
Speaker:	Woofer; 10cm×10cm PM Dynamic Speaker (2.7Ω) Tweeter; 2cm×5cm Ceramic Speaker (1.4kΩ)
Input:	MIC; sensitivity 0.8mV/applicable microphone impedance 200~600Ω, φ3.5 CD/LINE IN; sensitivity 330mV/50kΩ over DC IN; 13.2V
Output:	EXT SP; 2.7Ω HEADPHONES; 32Ω, φ3.5
Dimensions:	Total Size 579(W)×158(H)×193(D)mm Main Unit 322(W)×158(H)×193(D)mm Speaker Box 133(W)×158(H)×186(D)mm
Weight:	5.1kg without batteries

Radio Section:

Radio Frequency Range:	FM; 87.5~108MHz LW; 148.5~285kHz MW; 520~1610kHz SW; 5.9~18MHz
Intermediate Frequency:	FM; 10.7MHz AM; Z F G ...(LW/MW/SW); 455kHz E .....(LW/MW/SW); 470kHz
Sensitivity:	FM; 2.4μV/50mW output (−3dB Limit Sens.) LW; 79μV/m/50mW output MW; 56μV/m/50mW output SW; 5.6μV/50mW output

Tape Deck Section:

Frequency Response:	60~12,000Hz (with normal tape) 60~13,000Hz (with CrO_2 tape) 60~13,000Hz (with Metal tape) Playback only
Recording system:	AC bias, AC erase
Tape Speed:	4.8cm/s
Track System:	4-track 2 channel stereo recording and playback

Design and specifications are subject to change without notice.

Panasonic

Matsushita Electric Trading Co., Ltd.
P.O. Box 288, Central Osaka Japan

LOCATION OF CONTROLS AND COMPONENTS

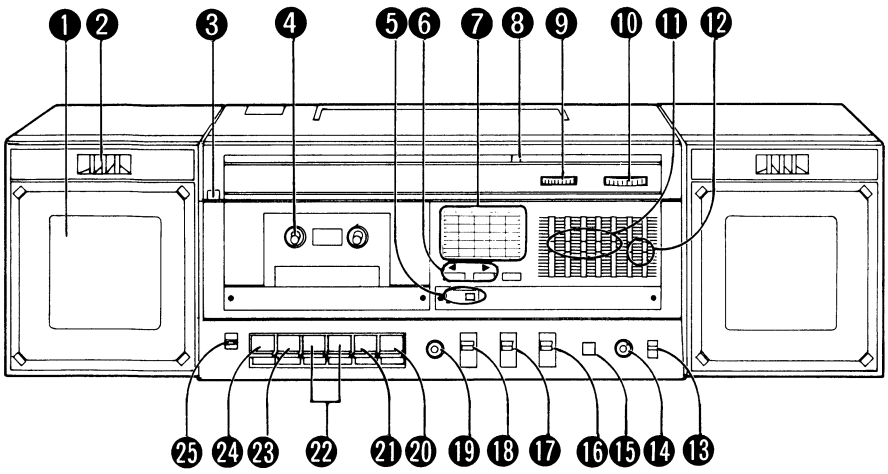

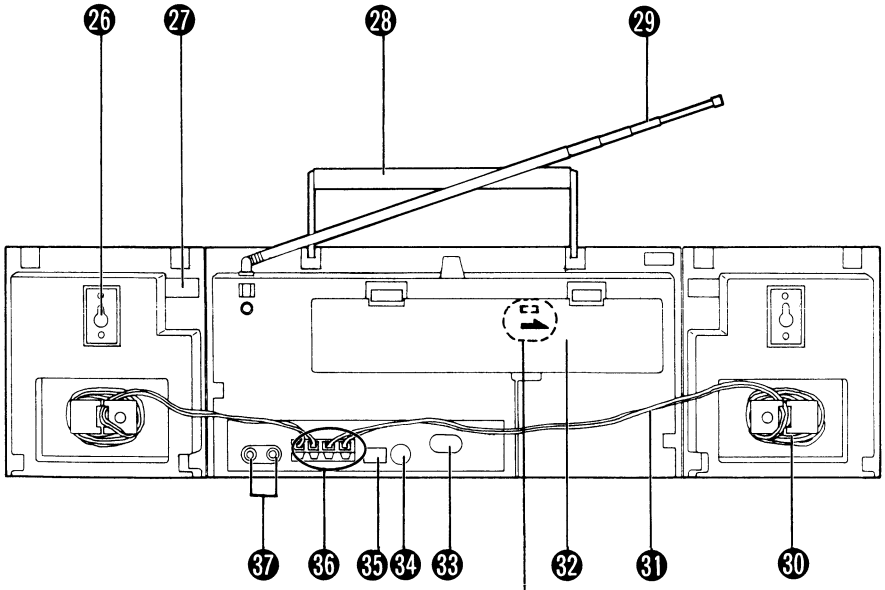

1. Speakers [Woofer] 10cm, 2.7Ω
2. Speakers [Tweeter] 2×5cm, 1.4kΩ
3. Direction Button (DIRECTION)
4. Cassette Compartment
5. Tape Counter and Reset Button (COUNTER)
6. Direction/Operation/Battery Check Indicators (REVERSE/FORWARD/OPR/BATT)
7. Spectrum Analyzer (SPECTRUM ANALYZER)
8. FM Stereo Indicator (FM STEREO)
9. Fine Tuning Control (FINE TUNING)
10. Tuning Control (TUNING)
11. Graphic Equalizer Controls (GRAPHIC EQUALIZER)
12. Volume Controls (VOLUME)
13. Built-in Microphone (MIC)
14. External Microphone Jack (EXT MIC)
15. Dolby* NR Switch (DOLBY NR)
16. Band Selector (BAND)
17. Function/FM Mode Selector (SELECTOR/FM MODE)
18. Tape Selector (TAPE SELECTOR)
19. Headphones Jack (PHONES) 32Ω, φ3.5
20. Pause Button (II PAUSE)
21. Stop/Eject Button (□ STOP/EJECT)
22. Fast/Cue Buttons (<<·>> FAST/CUE)
23. Playback Button (> PLAY)
24. Record Button (○ REC)
25. Reverse Mode Selector (REVERSE MODE)
26. Speaker Wall Mounts
27. Speaker Release Levers (RELEASE)
28. Handle
29. Telescopic Antenna
30. Speaker Cable Compartments
31. Speaker Cables
32. Battery Compartment
33. AC Socket (AC IN~)
34. DC Input Jack (DC IN 13.2V ⊖-⊙-⊕)
35. Beat Proof Switch (BEAT PROOF)
36. Speaker Terminals (SPEAKER IMP 2.7−8Ω)
37. CD/Line Input Jacks (CD/LINE IN) 330mV/50kΩ

* DOLBY SYSTEM

When the tape is caught in the pinch roller, etc. release the tape by tuning the pulley on the motor with the screwdriver in the direction of the arrow.

* "Dolby" and the double-D symbol are trademarks of Dolby Laboratories Licensing Corporation.
* Noise reduction system manufactured under license from Dolby Laboratories Licensing Corporation.

■ Spectrum Analyzer and Graphic Equalizer

The frequency components of the source signal are displayed, divided into five frequency bands (100 Hz, 330 Hz, 1 kHz, 3.3 kHz, 10 kHz).
In addition, different sound bands [100 Hz (bass), 330 Hz, 1 kHz (mid range), 3.3 kHz, 10 kHz (highs)] can be adjusted to suit your taste using the controls of the Graphic Equalizer, while the spectrum of the resulting sound is displayed by the Spectrum Analyzer.

- Positioning the control to the "+" side of the detent (center) will amplify the corresponding frequency band; the "−" side will attenuate it.

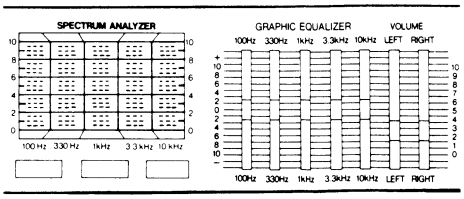

D

DISASSEMBLY INSTRUCTIONS

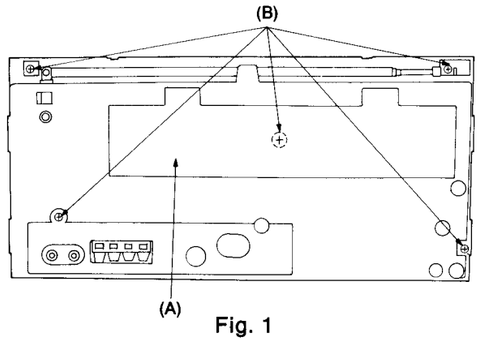

Fig. 1

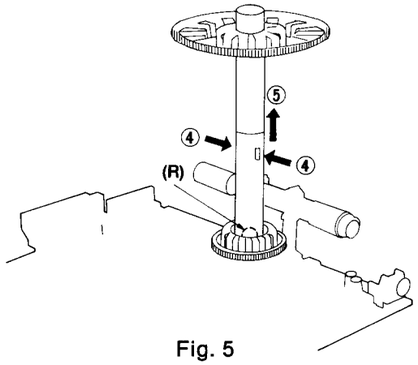

Fig. 5

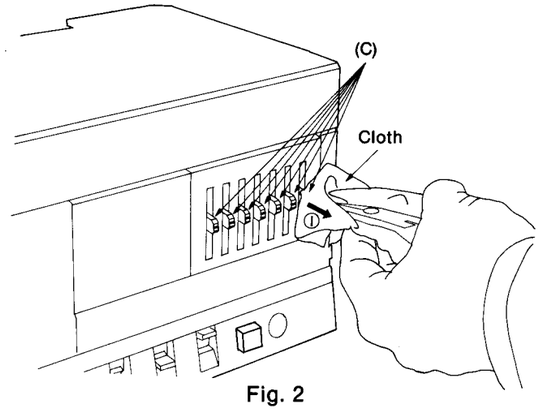

Fig. 2

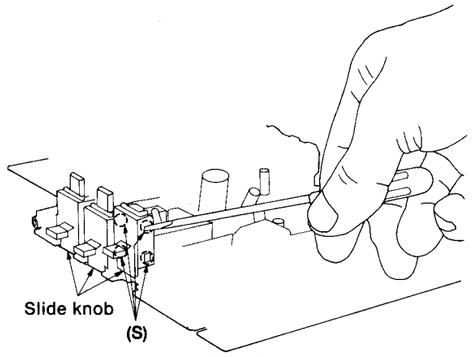

Fig. 6

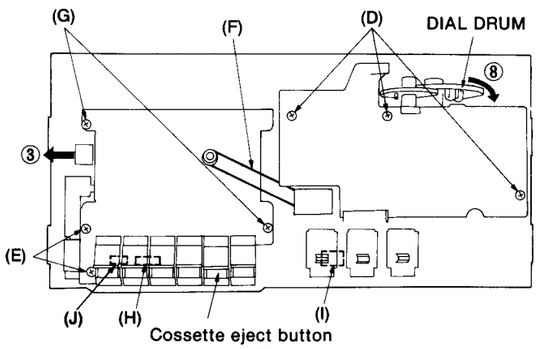

Fig. 3

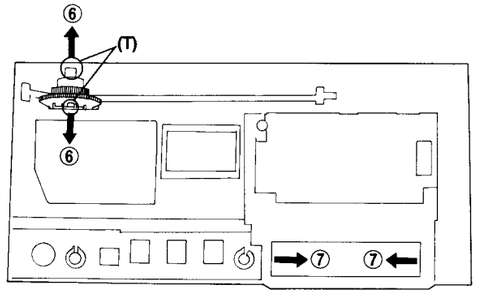

Fig. 7

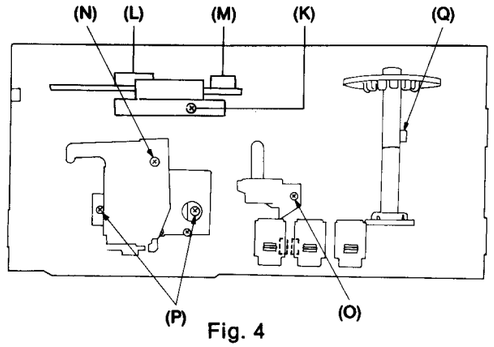

Fig. 4

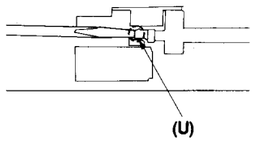

Fig. 8

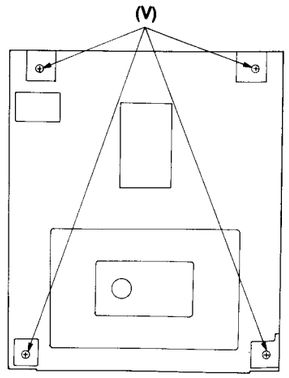

Fig. 9

■ DIAL SETTING POINT

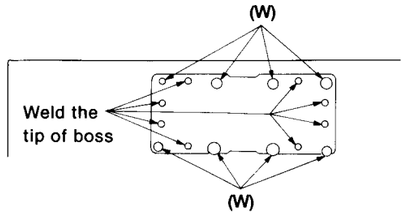

Fig. 10

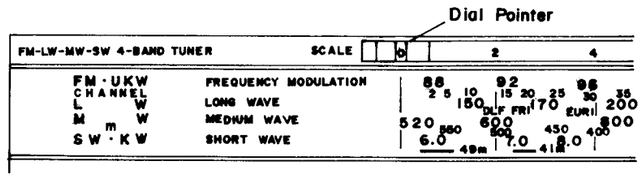

Fig. 11

When assemble the front cabinet, turn the dial drum to fully. counter clockwise and set the dial pointer at the position as shown in Fig. 3 and 11.

Ref. No.	Shown in Fig. —.	To remove —.	Remove —.
1	1	Front Cabinet	Battery Compartment.....(A)×1
2	1		Screw (3×50)mm.....(B)×5
3	2		Pull out the knob in the direction of arrow ①. (※1).....(C)×7
4	3		Push the eject button.
5	3	Graphic Equalizer Circuit Board	Screw (3×12)mm.....(D)×3
6	3		Pull out the graphic equalizer circuit board.
7	3	Reverse Mode Knob	Screw (3×12)mm.....(E)×2
8	3	Mechanism	Counter Belt.....(F)×1
9	3		Screw (3×12)mm.....(G)×2
10	3		Pull out the rib in the direction of arrow ③.
11	3		Socket (CS3).....(H)×1
12	3		Socket (CS2).....(I)×1
13	3		Socket (CS4).....(J)×1
14	4	Dolby Circuit Board	Screw (3×12)mm.....(K)×1
15	4		Socket (CS701).....(L)×1
16	4		Socket (CS700).....(M)×1
17	4	R/P Lever	Screw (3×10)mm.....(N)×1
18	4	Counter Angle	Screw (3×12)mm.....(O)×1
19	4	Main Circuit Board	Screw (3×12)mm.....(P)×2
20	4		Socket (CS5).....(Q)×1
21	5	Relay Gear	Push the rib in the direction of arrow ④ and pull out the relay gear in the direction of arrow ⑤.
22	5	Dial Drum	Screw (2.6×6)mm.....(R)×1
23	6	Slide Knob	Remove the rib with screw driver ⊖.....(S)×4
24	7	Tuning Knob	Puss the boss in the direction of arrow ⑥.....(T)×2
25	7	Cassette Compartment	Push the cassette compartment arm in the direction of arrow ⑦.
26	8	Pointer	Remove the rib with screwdriver ⊖.....(U)×1
27	9	Speaker Grill	Screw (3×50)mm.....(V)×4
28	10	Tweeter (※2)	Cut the tip of boss.....(W)×8

(※1) When taking off a knob, wrap it with a cloth to prevent scratches.
(※2) When replacing the tweeter, attach the tweeter to the speaker cabinet by welding it to the remainder of the boss.

▼ Be sure to fold at the (▼) mark so that mark is on the outside.

REPLACEMENT P

Important safety notice
Components identified
characteristics importar
When replacing any of t
manufacturer's specifie

Ref. No.	Part No
	INTEGR
IC 1	AN7205
IC 2	BA3308
IC 3	BA4236L
IC 4	BA3822LS
IC 5	AN7147N
IC 6	RVIBA1332L
IC 7, 8, 9, 10, 11	LB1403N
IC 700	RVILM1131C
	TR
Q 2	2SC2001K1
Q 3	2SC3311STA
Q 4	2SD439F
Q 6	2SB976R
Q 7, 8, 500, 501, 502, 50 504, 505, 507, 600, 60 602, 603, 604, 605, 60 700, 701, 702, 703, 70 705	2SC3311RTA
Q 100, 200	2SD1450TTA
Q 706	2SA1309KTA
	DIODE
D 1, 2, 3, 4, 6, 46, 50, 50 501, 502, 600, 601, 60 700, 701	MA165
D 5, 7, 8	RVDSLZ981
D 9, 47	RVDMTZ10B
D 10, 11, 12, 13, 39, 40, 41, 42, 43	RVD1SR35
D 14, 15, 16, 17, 18, 19, 20, 21, 22, 23, 24, 25, 26, 27, 28, 29, 30, 31, 32, 33, 34, 35, 36, 37, 38	RVDSLZ281
D 45	RVDMTZ5R1

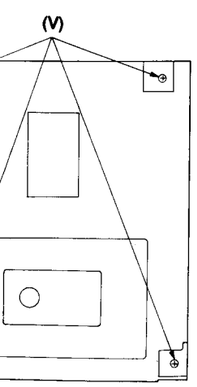

Fig. 9

■ DIAL SETTING POINT

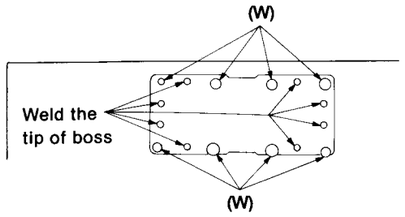

Fig. 10

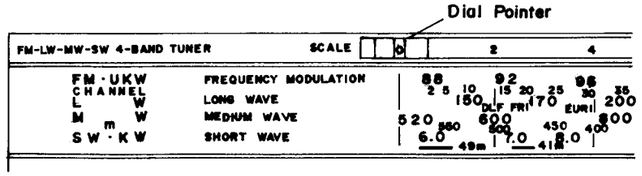

Fig. 11

When assemble the front cabinet, turn the dial drum to fully counter clockwise and set the dial pointer at the position as shown in Fig. 3 and 11.

Ref. No.	Shown in Fig. —.	To remove —.	Remove —.
1	1	Front Cabinet	Battery Compartment.....(A)×1
2	1		Screw (3×50)mm.....(B)×5
3	2		Pull out the knob in the direction of arrow ①. (※1).....(C)×7
4	3		Push the eject button.
5	3	Graphic Equalizer Circuit Board	Screw (3×12)mm.....(D)×3
6	3		Pull out the graphic equalizer circuit board.
7	3	Reverse Mode Knob	Screw (3×12)mm.....(E)×2
8	3	Mechanism	Counter Belt.....(F)×1
9	3		Screw (3×12)mm.....(G)×2
10	3		Pull out the rib in the direction of arrow ③.
11	3		Socket (CS3).....(H)×1
12	3		Socket (CS2).....(I)×1
13	3		Socket (CS4).....(J)×1
14	4	Dolby Circuit Board	Screw (3×12)mm.....(K)×1
15	4		Socket (CS701).....(L)×1
16	4		Socket (CS700).....(M)×1
17	4	R/P Lever	Screw (3×10)mm.....(N)×1
18	4	Counter Angle	Screw (3×12)mm.....(O)×1
19	4	Main Circuit Board	Screw (3×12)mm.....(P)×2
20	4		Socket (CS5).....(Q)×1
21	5	Relay Gear	Push the rib in the direction of arrow ④ and pull out the relay gear in the direction of arrow ⑤.
22	5	Dial Drum	Screw (2.6×6)mm.....(R)×1
23	6	Slide Knob	Remove the rib with screw driver ⊖.....(S)×4
24	7	Tuning Knob	Puss the boss in the direction of arrow ⑥.....(T)×2
25	7	Cassette Compartment	Push the cassette compartment arm in the direction of arrow ⑦.
26	8	Pointer	Remove the rib with screwdriver ⊖.....(U)×1
27	9	Speaker Grill	Screw (3×50)mm.....(V)×4
28	10	Tweeter (※2)	Cut the tip of boss.....(W)×8

(※1) When taking off a knob, wrap it with a cloth to prevent scratches.
(※2) When replacing the tweeter, attach the tweeter to the speaker cabinet by welding it to the remainder of the boss.

▼ Be sure to fold at the (▼) mark so that mark is on the outside.

ELECTRICAL PARTS LIST

REPLACEMENT PARTS LIST

Important safety notice
Components identified by ⚠ mark have special characteristics important for safety.
When replacing any of these components, use only manufacturer's specified parts.

Z ... For all European areas except E F G.
E ... For United Kingdom.
F ... For France.
G ... For F.R. Germany.

Ref. No.	Part No.	Part Name & Description
INTEGRATED CIRCUITS		
IC 1	AN7205	IC (FM FRONT END)
IC 2	BA3308	IC (PRE/EQ AMP)
IC 3	BA4236L	IC (FM/AM IF AMP, DET AM OSC, MIX)
IC 4	BA3822LS	IC (GRAPHIC EQ AMP)
IC 5	AN7147N	IC (POWER AMP)
IC 6	RVIBA1332L	IC (FM MPX AMP)
IC 7, 8, 9, 10, 11	LB1403N	IC (SPECTRUM ANALIZER)
IC 700	RVILM1131C	IC (DOLBY AMP)
TRANSISTORS		
Q 2	2SC2001K1	Transistor (BIAS OSC)
Q 3	2SC3311STA	Transistor (SPECTRUM ANALIZER AMP)
Q 4	2SD439F	Transistor (REGULATOR)
Q 6	2SB976R	Transistor (SWITCHING)
Q 7, 8, 500, 501, 502, 503, 504, 505, 507, 600, 601, 602, 603, 604, 605, 607, 700, 701, 702, 703, 704, 705	2SC3311RTA	Transistor (SWITCHING, AF AMP, REC AMP)
Q 100, 200	2SD1450TTA	Transistor (SWITCHING)
Q 706	2SA1309KTA	Transistor (SWITCHING)
DIODES & RECTIFIERS		
D 1, 2, 3, 4, 6, 46, 50, 500, 501, 502, 600, 601, 602, 700, 701	MA165	Diode (SWITCHING, MUTING, DETECTOR)
D 5, 7, 8	RVDSLZ981CA	LED (FM ST. OPE/BATT, FWD/REV)
D 9, 47	RVDMTZ10BTA	Diode (REGULATOR)
D 10, 11, 12, 13, 39, 40, 41, 42, 43	RVD1SR35	Diode (RECTIFIER)
D 14, 15, 16, 17, 18, 19, 20, 21, 22, 23, 24, 25, 26, 27, 28, 29, 30, 31, 32, 33, 34, 35, 36, 37, 38	RVDSLZ281CA	LED (SPECTRUM ANALIZER IND.)
D 45	RVDMTZ5R1B	Diode (REGULATOR)

Ref. No.	Part No.	Part Name & Description
COILS		
L 1	RLQY30S1	Choke Coil
L 2	RLA3B41	Antenna Coil, SW
L 4	RLF6W152	Antenna Coil, MW
L 6 Z E F	RL04Y93	Oscillator Coil, FM
L 6 G	RL04N198	Oscillator Coil, FM
L 7	RL01B12	Oscillator Coil, LW
L 8	RL02B108	Oscillator Coil, MW
L 9	RL03B87	Oscillator Coil, SW
L 10	RL08R2	REC BIAS Adjustment VR.
L 11	RLQZB101K	Choke Coil
L 12, 13 G	RLQZB470KTD	Choke Coil
L 500, 600	RLE5031	Filter
L 501, 601	RLQZB822K	Choke Coil
TRANSFORMERS		
T 1, 3	RLi4B153	IFT, FM 1st, 2nd
T 2	RLi2B153	IFT, AM
T 4 Z F G	RLT5U4G2A	Power Transformer ⚠
T 4 E	RLT5U4A1BW	Power Transformer ⚠
VARIABLE CAPACITORS		
VC 1, 2, 3, 4 (CT1, 3, 5, 8)	RCV4RC2RA	Variable Capacitor/with Trimmer Capacitor
VC 5	RCVMH60C8	Fine Tuning
TRIMMER CONDENSERS		
CT 2, 6, 7	RCVCTC10U	Trimmer Capacitor
CT 9 G	RCVCTZ3210	Trimmer Capacitor
VARIABLE RESISTORS		
VR 1, 2, 106, 206	EVND4AA00B14	FM VCO, Rec Bias, R/P Gain Adjustment VR.
VR 100, 200	EWATM2C95B54	Volume Control VR.
VR 101, 102, 103, 104, 105, 201, 202, 203, 204, 205	EWATA6C95G54	Graphic EQ Control VR.
VR 500, 600	EVND1AA00B14	R/P Gain Adjustment VR.

Ref. No.	Part No.	Part Name & Description
RESONATOR		
X 1	EXCFF76108L	Component Combinations
CERAMIC FILTERS		
CF 1 Z F G	RVFSFZ455JZ	Ceramic Filter (455kHz)
CF 1 E	RVFSFZ470JL	Ceramic Filter (470kHz)
CF 2	RVF107WDZ	Ceramic Filter (10.7MHz)
THERMISTOR		
TH 1	RRT202	Thermistor
FUSES		
F 1	XBA2C16TB0U	Fuse (T1.6A) ⚠
F 2	XBA2C05TB0U	Fuse (T500mA) ⚠
F 3	XBA2C03SB0U	Fuse (T315mA) ⚠
SWITCHES		
S 1	RSS4H02Z	Slide Switch, Band
S 2	RSS4D04YA	Slide Switch, Selector/FM Mode
S 3	RSS2F06Z	Slide Switch, Tape Selector
S 4	RSH2H03TA	Push Switch, Record/Playback
S 5	RFA76ZA	Reaf Switch, Play
S 6, 7	RFA67Z	Reaf Switch, FWD/REV, FF/REW
S 11	RSS3A17ZA	Slide Switch, Beat Proof
S 12	RSHZB27YA	Push Switch, Dolby
JACKS		
J 1	RJF1098Y	Jack, EXT SP
J 2	RJF1099Z	Jack, CD/LINE IN
J 3	QJA0172	Jack, EXT MIC
J 4	RJJD7S2Z	Jack, Head Phones
J 5 (S8) Z F G	RJJ1A4ZD	Jack, AC IN ⚠
J 5 (S8) F	RJJ1A5ZCH	Jack, AC IN ⚠
J 6	RJJ97Y	Jack, DC IN

DC voltage measurement are taken with electronics voltmeter from negative terminal of battery.
No mark ... Record/Playback position,
No mark ... Playback position,

[ ] ... Record position, (( )) ... Dolby on position,
[[ ]] ... CUE/REV position, < > ... FM position,
( ) ... AM position, ⟨ ⟩ ... Dolby off position.

SCHEMATIC DIAGRAM

RX-C53L RX-C53L

Record/Playback
Record Signal L

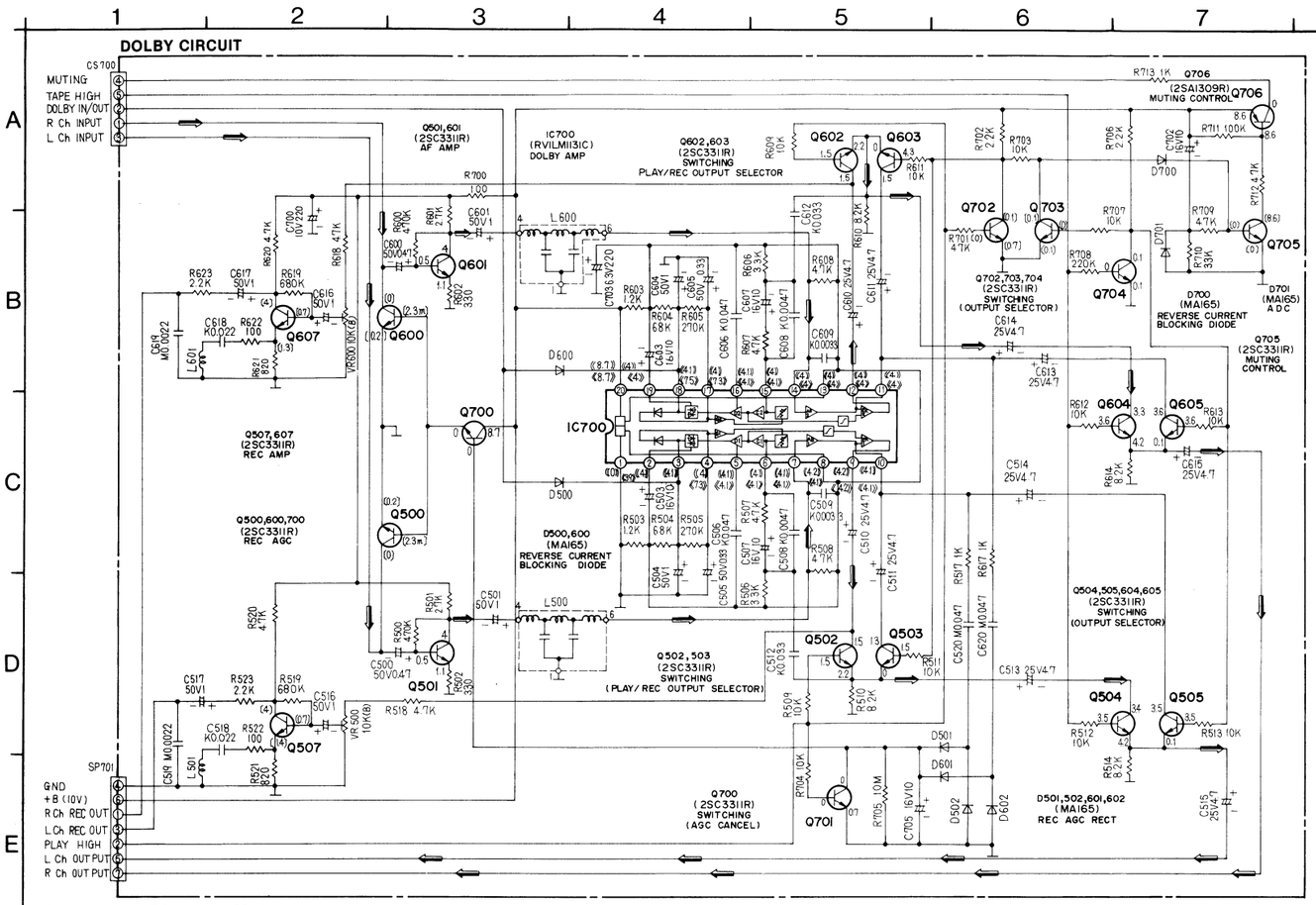

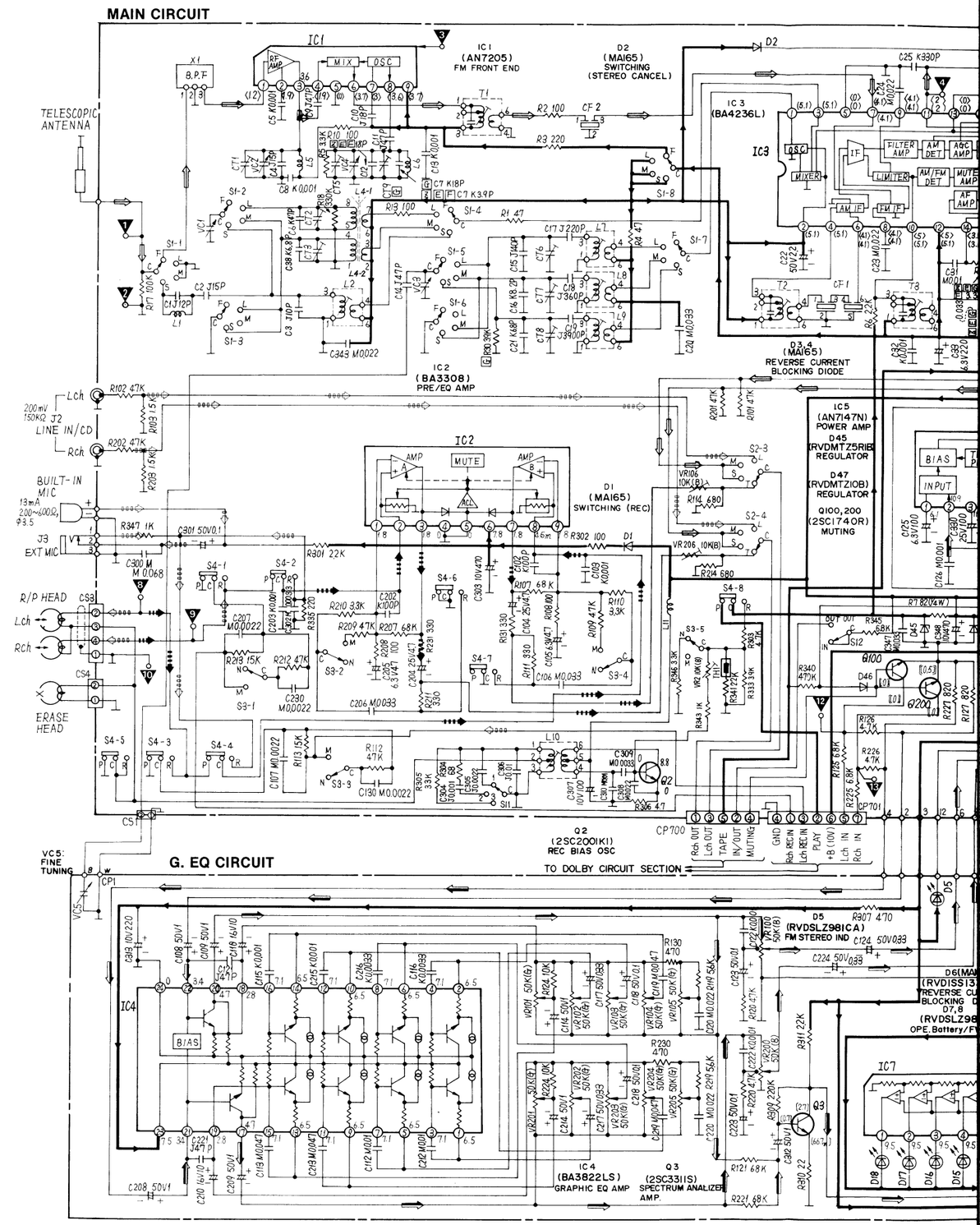

Schematic Diagram Note:

Note:

1. S1-1~S1-8: Band selector switch in "FM" position. (F ... FM, L ... LW, M ... MW, S ... SW)
2. S2-3~S2-6: Selector/FM Mode switch in "Tape/Off" position. (T ... Tape/Off, S ... FM Stereo, M ... FM Mono, L ... CD/Line In)
3. S3-1~S3-5: Tape Selector switch in "NORMAL" position. (N ... Normal, R ... CrO_2/METAL (P.B.))
4. S4-1~S4-8: Record/Playback switch in "PLAYBACK" position. (R ... Record, P ... Playback)
5. S5-1, S5-2: Playback switch in "OFF" position.
6. S6: FWD/REV switch in "OFF" position.
7. S7: F.F./REW switch in "OFF" position.
8. S8: AC/DC IN Select switch in "AC IN" position.
9. S11: Beat proof switch in "I" position. (1 ... I, 2 ... II, 3 ... III)
10. S12: Dolby NR switch in "IN" position. (1 ... IN, 2 ... OUT)
11. VR1: FM VCO adjustment VR.
12. VR100, VR200: Volume control VR.
13. VR101~VR105: Graphic Equalizer control VR.
14. Battery Current: No signal ..... 277 mA
    Maximum output
    Radio ..... 898 mA
    Tape/Playback ..... 1321 mA
    Tape/Recording ..... 340 mA
15. Described is schematic diagram are two types of numbers; the supply parts number and production parts number for transistors and diodes.
    One type number is used for supply parts number and production parts number which they are identical.
    e.g. Q1
    2SC2412NRTB, LNSTB — Production parts number
    [2SC2412] ———— Supply parts number
16. The mark (▼) shows test point. e.g. ▼1 = test point 1.
17. Important safety notice
    Components identified by ⚠ mark have special characteristics important for safety.
    When replacing any of these components, use only manufacturer's specified parts.
18. **The supply parts number is described alone in the replacement parts list.**

- **This schematic diagram may be modified at any time with the development of new technology.**

Z ... For all European areas except E F G.
E ... For United Kingdom.
F ... For France.
G ... For F.R. Germany.

ken with electronics
of battery.
tion,

[ ]...Record position, (( ))...Dolby on position,
[[ ]]...CUE/REV position, < >...FM position,
( )...AM position, ⟨ ⟩...Dolby off position.

SCHEMATIC DIAGRAM

Record/Playback Signal Line
Record Signal Line
Main (Tape/Radio) Signal Line
Radio (FM) Signal Line
+B Voltage Line

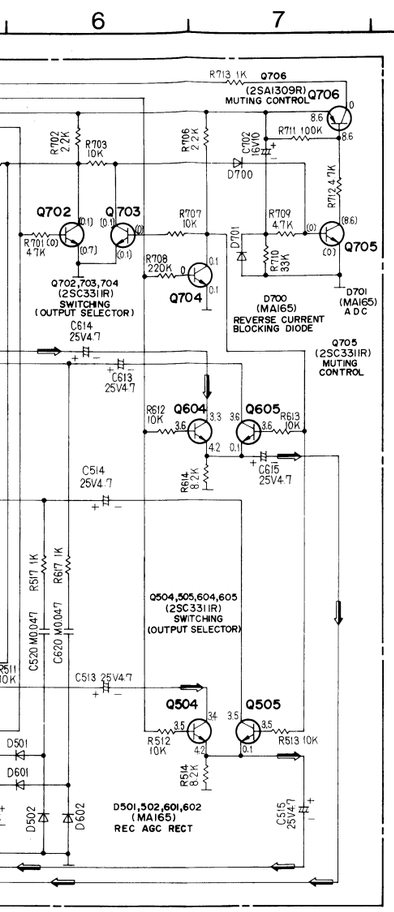

.....277mA
.....898mA
.....1321mA
.....340mA

two types of
nd production parts

parts number and
are identical.

ction parts number
y parts number
▼ =test point 1.

ave special

nents, use only

d alone in the

fied at any time with

FG.

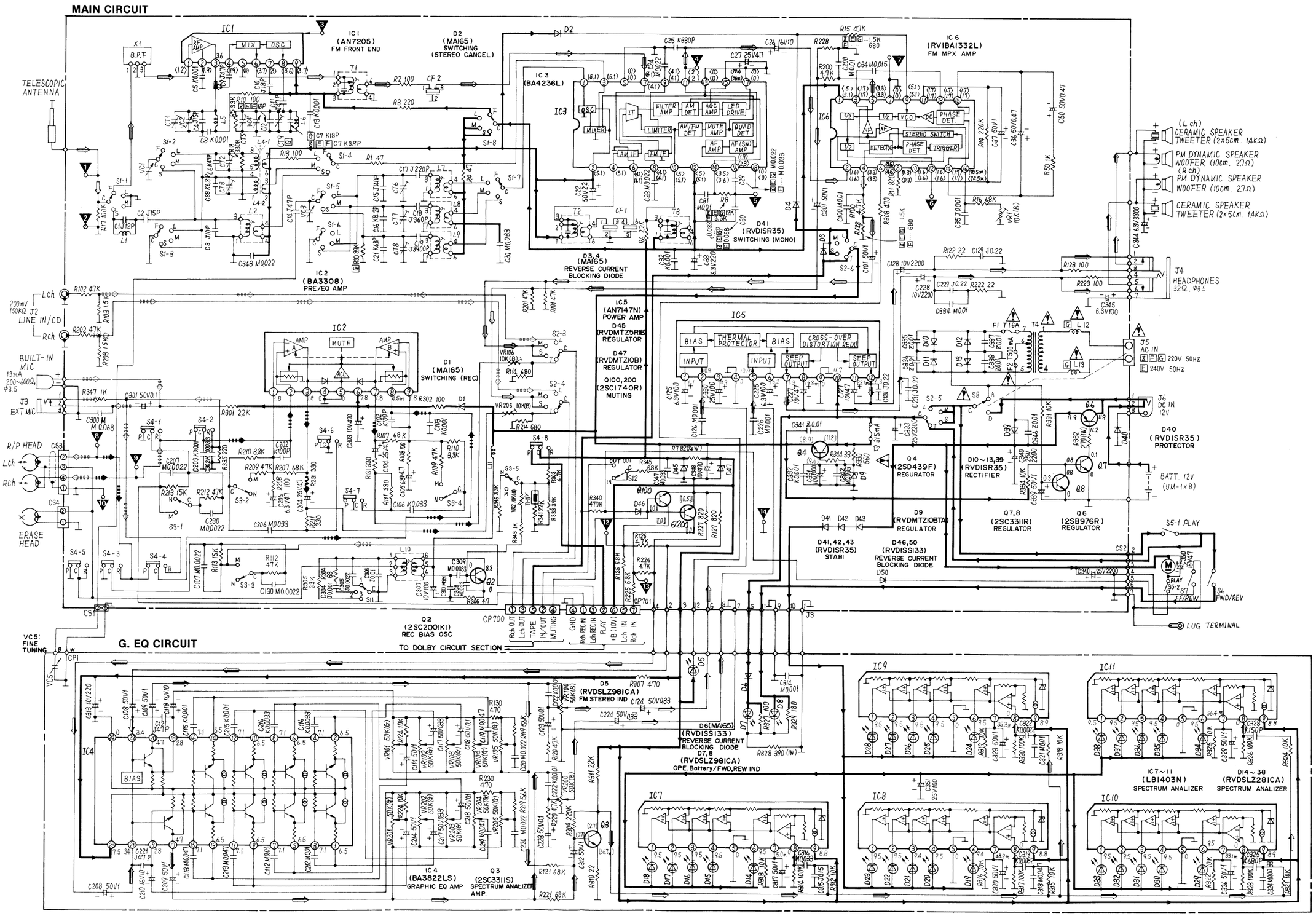

CIRCUIT BOARD AND WIRING CONNECTION DIAGRAM

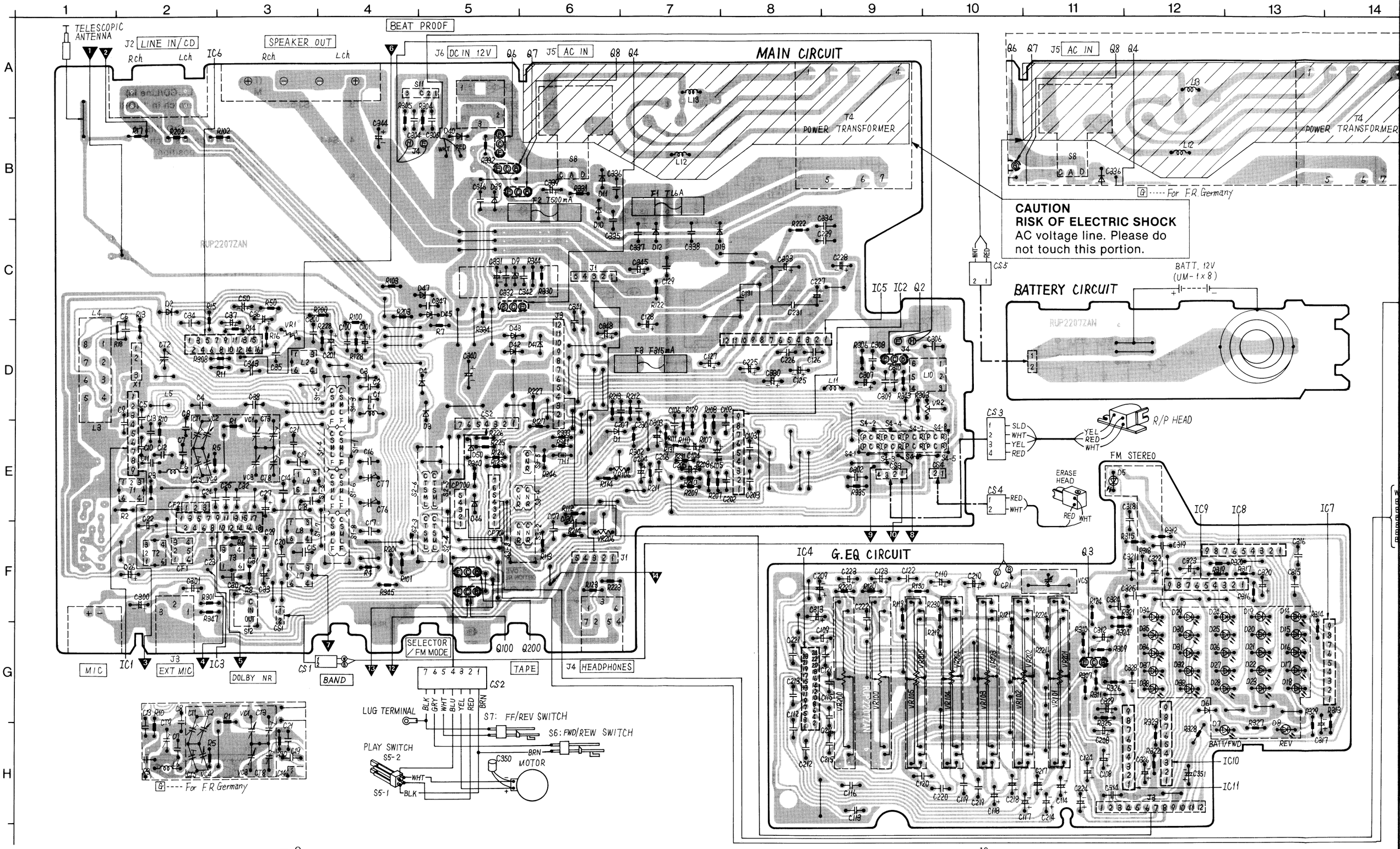

RX-C53L

CIRCUIT BOARD AND WIRING CONNECTION DIAGRAM

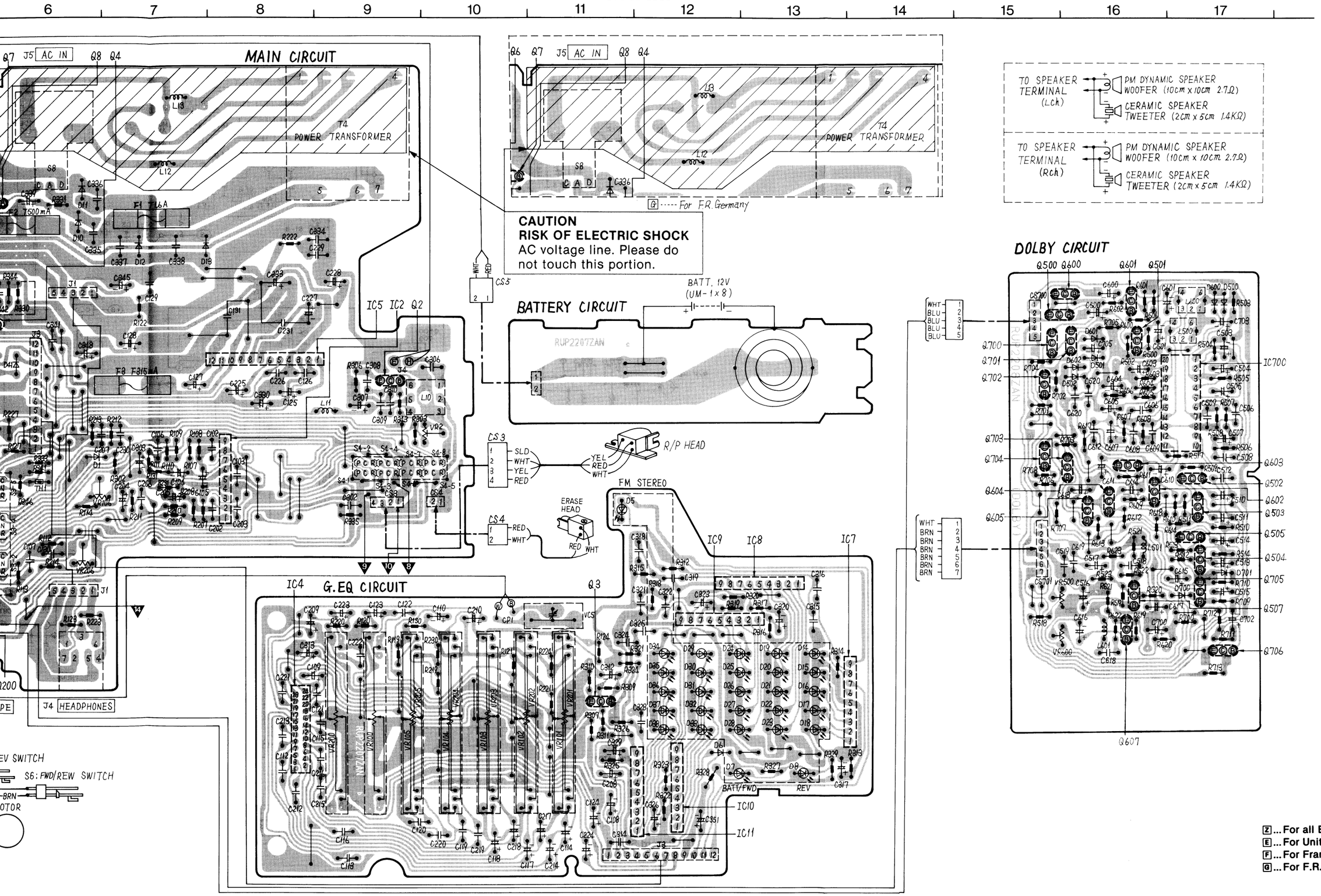

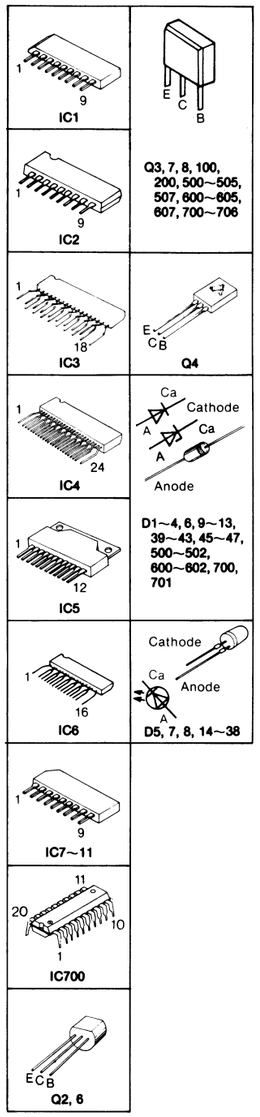

Z ... For all European areas except E F G.
E ... For United Kingdom.
F ... For France.
G ... For F.R. Germany.

Numbering System of Resistor

Example:

ERD	25	F	J	101
Type	Wattage	Shape	Tolerance	Value (100Ω)

ERJ	6G	C	J	2R2
Type	Wattage	Shape	Tolerance	Value (2.2Ω)

Numbering System of Capacitor

Example:

ECKD	1H	102	Z	F
Type	Voltage	Value (1000pF)	Tolerance	Peculiarity

ECEA	50	M	R47
Type	Voltage	Peculiarity	Value (0.47μF)

Resistor Type		Wattage	Tolerance
ERD:	Carbon Resistor	10 : 1/8W	F : ±1%
ERC:	Solid Resistor	25 : 1/4W	G : ±2%
ERF:	Incombustible Box-Shaped Wire-Wound Resistor	50 : 1/2W	J : ±5%
		18 : 1/8W	K : ±10%
		14 : 1/4W	H : ±20%
		12 : 1/2W	
ERG:	Metal Oxide-Film Resistor	1 : 1W	
		2 : 2W	
ERM:	Wire-Wound Resistor	3 : 3W	
ERO:	Superstable Metal Film Resistor	S1 : 1/2W	
		S2 : 1/4W	
		6G : 1/10W	
		8G : 1/8W	
ERX:	Metal-Film Resistor		
RRJ: ERJ:	Chip Resistor		

Capacitor Type		Voltage	Tolerance
ECCD:	Ceramic Capacitor (Chitacon)	(ECCD, ECKD Type) 1H : 500V DC 2H : 500V DC	K : ±10%
ECKD:	Ceramic Capacitor (Chitabari)	(ECFD Type) C : 12V DC D : 25V DC	M : ±20%
ECFD:	Semiconductor Ceramic Capacitor	E : 50V DC	Z : +80% −20%
ECE□:	Electrolytic Capacitor	(ECQ Type) 05 : 50WV DC 1 : 100WV DC	J : ±5%
ECS□:	Tantalum Fixed Electrolytic Capacitor	(ECE, ECS Type) 0G : 4V 0J : 6.3V	G : ±2%
ECQ□:	Polystyrenc Film Capacitor	1A : 10V 1C : 16V	F : ±1%
ECQS:	Polystyrene Film Capacitor	1E : 25V 1V : 35V	C : ±0.25pF
ECQS:	Polypropylene Film Capacitor	1H : 50V 1J : 63V	D : ±0.5pF
ECQV:	T.F Capacitor	2A : 100V	F : ±1pF
ECU□: RCU□:	Chip Capacitor		
ECBT:	Cylindrical Ceramic Capacitor		

※ Capacity are in microtarads (μF) unless specified otherwise, P=Pico-farads.
※ Resistance are in ohms (Ω), unless specified otherwise, 1K=1,000Ω, 1M=1,000KΩ

Z ... For all European areas except E F G.
E ... For United Kingdom.
F ... For France.
G ... For F.R. Germany.

REPLACEMENT PARTS LIST

Ref. No.	Part No.
CAPACITORS	
C 1	RCBS1H120JC
C 2, 4	RCBS1H150JC
C 3, 16, 38	RCBS1H100JC
C 5, 8, 13, 32, 103, 115, 122, 126, 203, 215, 222, 226, 332	RCBS1H102KB
C 6	ECCT1H470KC
C 7	RCBS1H3R9KCY
C 7 Z E F	RCBS1H3R9KCY
C 7 G	ECCT1H180KT
C 9	RCBS1H4R7KC
C 10	RCBS1H180JC
C 11, 14, 121, 221	RCBS1H470JL
C 12 Z E F	RCBS1H180JCY
C 15	ECQP2A141JZ
C 16	RCBS1H8R2KCY
C 17	ECQP2A221JZ
C 18	ECQP2A361JZ
C 19	ECQP2A392JZ
C 20, 106, 120, 206, 220, 316, 342, 347	ECFT1C333MD
C 21, 38	RCBS1H6R8KC
C 22	ECEA1HU2R2B
C 23, 24, 308, 343	ECFT1C223MD
C 25	RCBS1H331KB
C 26, 110, 210, 503, 507, 603, 607, 705	ECEA1CU100
C 27, 104, 204, 510, 511, 514, 610, 611, 614	ECEA1EU4R7
C 29 F	ECCT1C333MDY
C 29 Z E G	ECFT1C223MDY
C 30 F	ECFT1C683MDY
C 30 Z E G	ECCT1C333MDY
C 31, 100, 112, 200, 212, 310, 321	ECFT1C103MD
C 33, 703	ECEA0JU221B
C 34	ECFT1C153MD
C 35	ECQM1H102JV
C 36, 50	ECEA1HUR47B
C 37, 101, 108, 109, 114, 201, 208, 209, 214, 312, 317, 320, 323, 326, 329, 339, 501, 504, 601, 604	ECEA1HU010
C 102, 202	RCBS1H101KB
C 105, 205	ECEA0JU470
C 107, 130, 207, 230, 322	RCBS1C222MX
C 113, 119, 213, 219, 318	ECFT1C473MD
C 116, 216, 302, 309, 324	RCBS1C332MX
C 117, 124, 217, 224, 505, 605	ECEA1HUR33B
C 118, 123, 218, 223, 301	ECEA1HU0R1B
C 125, 225, 345	ECEA0JU101B
C 127, 227	ECEA1AU470
C 128, 228	ECEA1AU222E
C 129, 229	ECQV1H224JZ3
C 131	ECQV1H224JZW
C 300	ECFT1C683MD
C 303, 348	ECEA1AU471
C 304	ECQP2A102JZT
C 305	ECQP2A222JZT
C 306	ECQP2A103JZ
C 307	ECEA1AU101B
C 313, 700	ECEA1AU221B
C 314	ECKT1H102MD
C 315	ECQV1H154JZ
C 319	RCBS1C822MY
C 325	RCBS1H681KB
C 328	RCBS1H151KB
C 330, 351	ECEA1EU101B
C 331	ECEA1AU102E
C 333, 340	ECEA1EU222
C 335, 336, 337, 338, 341, 346	ECKT1H103ZF
C 344	ECEA0JU332E
C 350	ECEA1CF470
C 500, 600	ECEA1HUR47B
C 506, 520, 606, 620	ECFT1C473KD
C 508, 608	ECFT1C472KD
C 509, 609	ECFT1C332KD
C 512, 612	ECFT1C333KDY
C 513, 515, 613, 615	ECEA1EK4R7B
C 516, 517, 616, 617	ECEA1HK010B
C 518, 618	ECFT1C223KD
C 519, 619	ECKT1H222MD
C 702	ECEA1CK100B
RESISTORS	
R 1, 4	ERDS2TJ470T
R 2, 10, 13, 108, 123, 208, 223, 302, 327, 522, 622, 700	ERDS2TJ101T
R 3, 335	ERDS2TJ221
R 5, 110, 210, 346, 506, 606	ERDS2TJ332
R 6, 301, 311, 341, 523, 623, 702, 706	ERDS2TJ222
R 7	ERD25VJ820T
R 8 F	ERDS2TJ332T
R 8 Z E G	ERDS2TJ123T
R 11, 127, 227, 521, 621	ERDS2TJ821T
R 14, 309, 708	ERDS2TJ224T
R 15, 100, 109, 120, 126, 200, 209, 220, 226, 303, 507, 508, 518, 520, 607, 608, 618, 620, 709, 712	ERDS2TJ472
R 16, 125, 225, 345	ERDS2TJ682T
R 17, 314, 317, 320, 323, 326, 711	ERDS2TJ104T
R 18	ERDS2TJ334
R 30 G	ERDS2TJ392T
R 50, 343, 347, 517, 617, 713	ERDS2TJ102
R 101, 102, 112, 201, 202, 212, 701	ERDS2TJ473T
R 103, 203	ERDS2TJ152T
R 107, 121, 207, 221, 504, 604	ERDS2TJ683
R 111, 131, 211, 231, 502, 602	ERDS2TJ331
R 113, 213	ERDS2TJ153T
R 114, 214	ERDS2TJ681
R 119, 219	ERDS2TJ562T
R 122, 222	ERDS2TJ2R2T
R 124, 224, 312, 313, 315, 316, 318, 319, 321, 322, 324, 325, 331, 334, 509, 511, 512, 513, 609, 611, 612, 613, 703, 704, 707	ERDS2TJ103T
R 128, 228 F	ERDS2TJ681T
R 128, 228 Z E G	ERDS2TJ152T
R 130, 230, 307, 308	ERDS2TJ471
R 304	ERDS2TJ680T
R 305, 710	ERDS2TJ333
R 306	ERDS2TJ4R7T
R 310	ERDS2TJ220T
R 328	ERG1ANJ391
R 329	ERDS2TJ181T
R 330	ERDS2TJ561T
R 332	ERG1ANJ271
R 333	ERDS2TJ392T
R 340	ERDS2TJ474T
R 344	ERDS2TJ330
R 500, 600	ERDS2TJ474
R 501, 601	ERDS2TJ272T
R 503, 603	ERDS2TJ122T
R 505, 605	ERDS2TJ274
R 510, 514, 600, 614	ERDS2TJ822
R 519, 619	ERDS2TJ684
R 705	ERD25VJ106T

BLOCK DIAGRAM

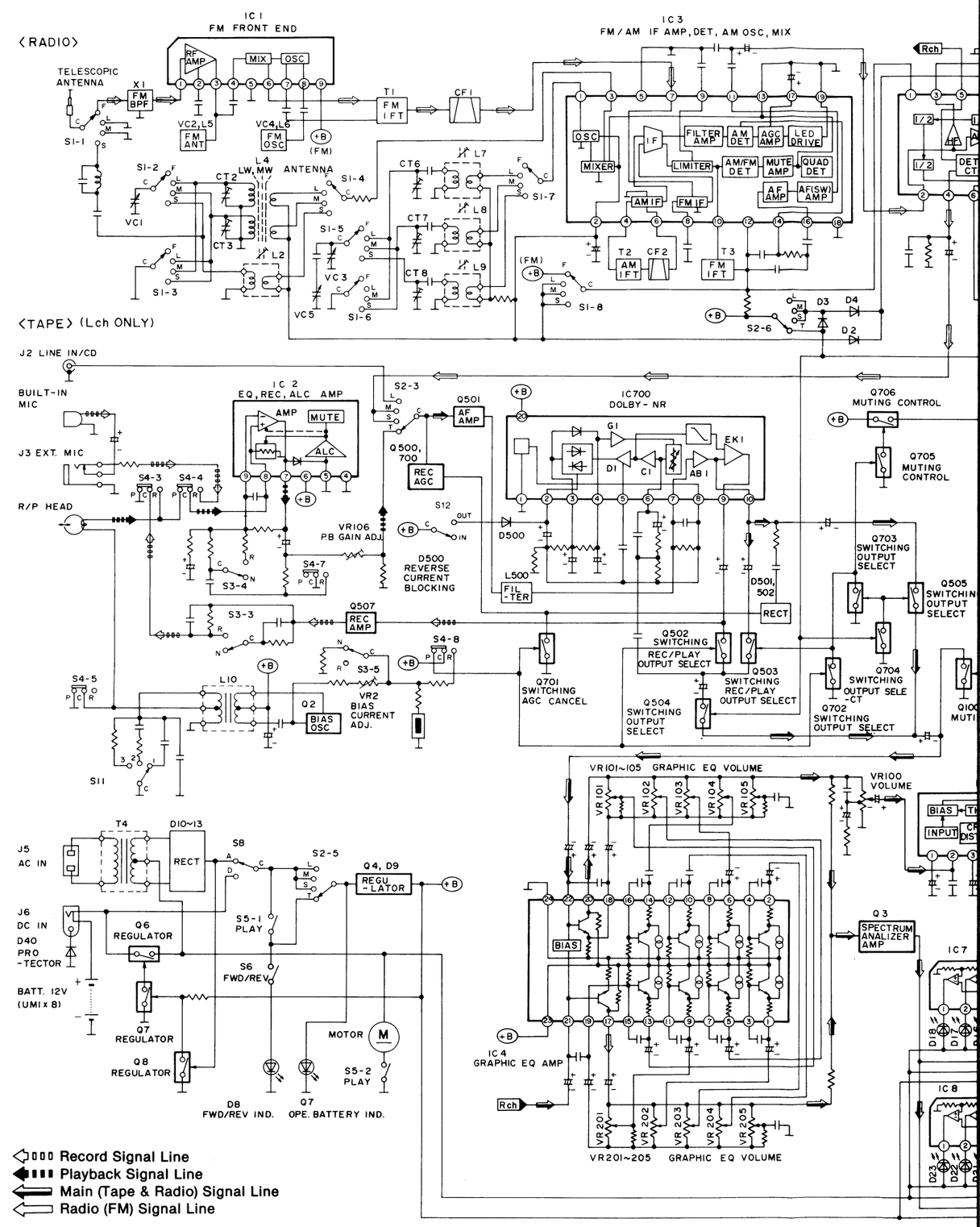

BLOCK DIAGRAM

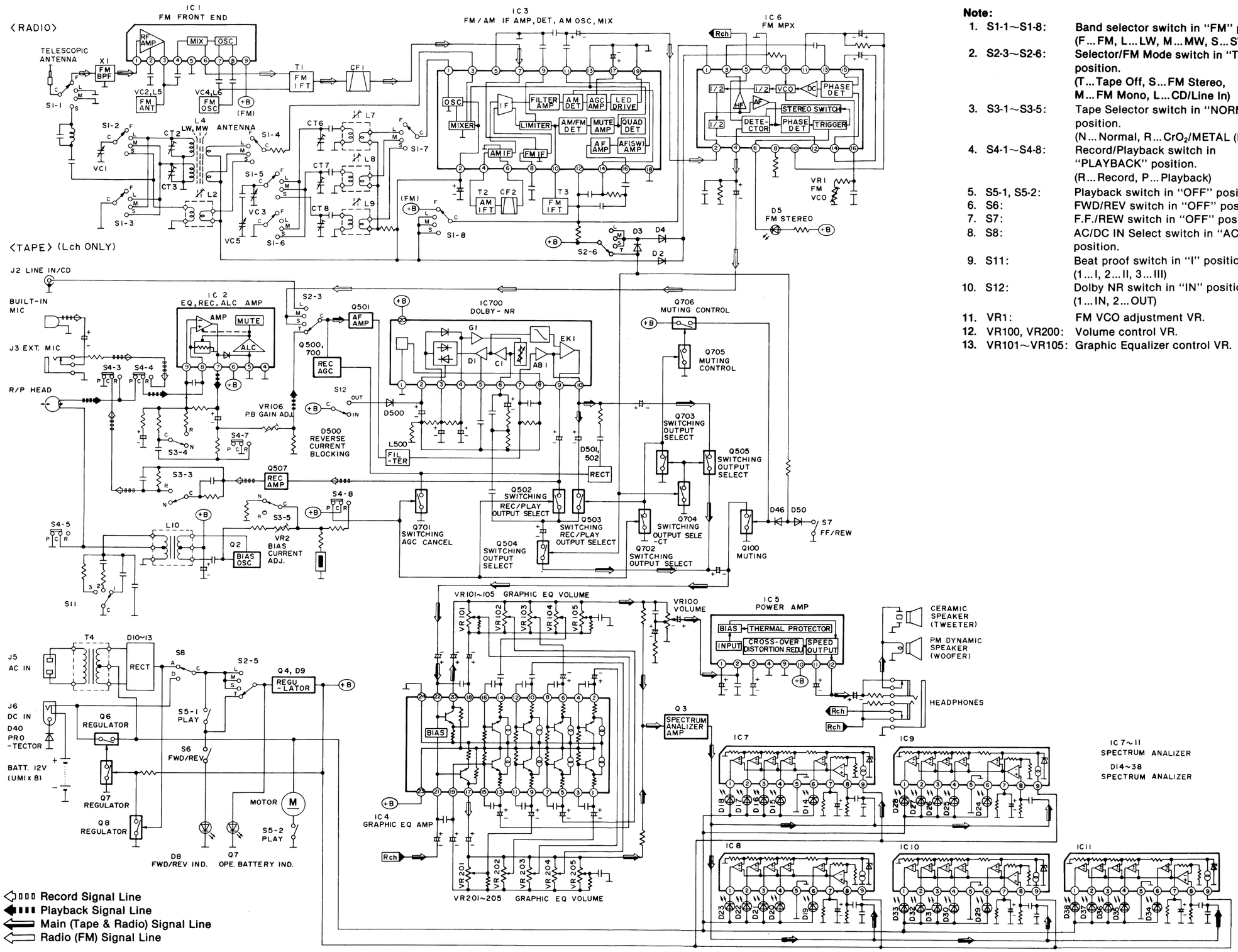

Note:

1. S1-1~S1-8: Band selector switch in "FM" position. (F...FM, L...LW, M...MW, S...SW)
2. S2-3~S2-6: Selector/FM Mode switch in "Tape/Off" position. (T...Tape Off, S...FM Stereo, M...FM Mono, L...CD/Line In)
3. S3-1~S3-5: Tape Selector switch in "NORMAL" position. (N...Normal, R...CrO_2/METAL (P.B.))
4. S4-1~S4-8: Record/Playback switch in "PLAYBACK" position. (R...Record, P...Playback)
5. S5-1, S5-2: Playback switch in "OFF" position.
6. S6: FWD/REV switch in "OFF" position.
7. S7: F.F./REW switch in "OFF" position.
8. S8: AC/DC IN Select switch in "AC IN" position.
9. S11: Beat proof switch in "I" position. (1...I, 2...II, 3...III)
10. S12: Dolby NR switch in "IN" position. (1...IN, 2...OUT)
11. VR1: FM VCO adjustment VR.
12. VR100, VR200: Volume control VR.
13. VR101~VR105: Graphic Equalizer control VR.

MECHANISM PARTS LOCATION

(TOP VIEW)

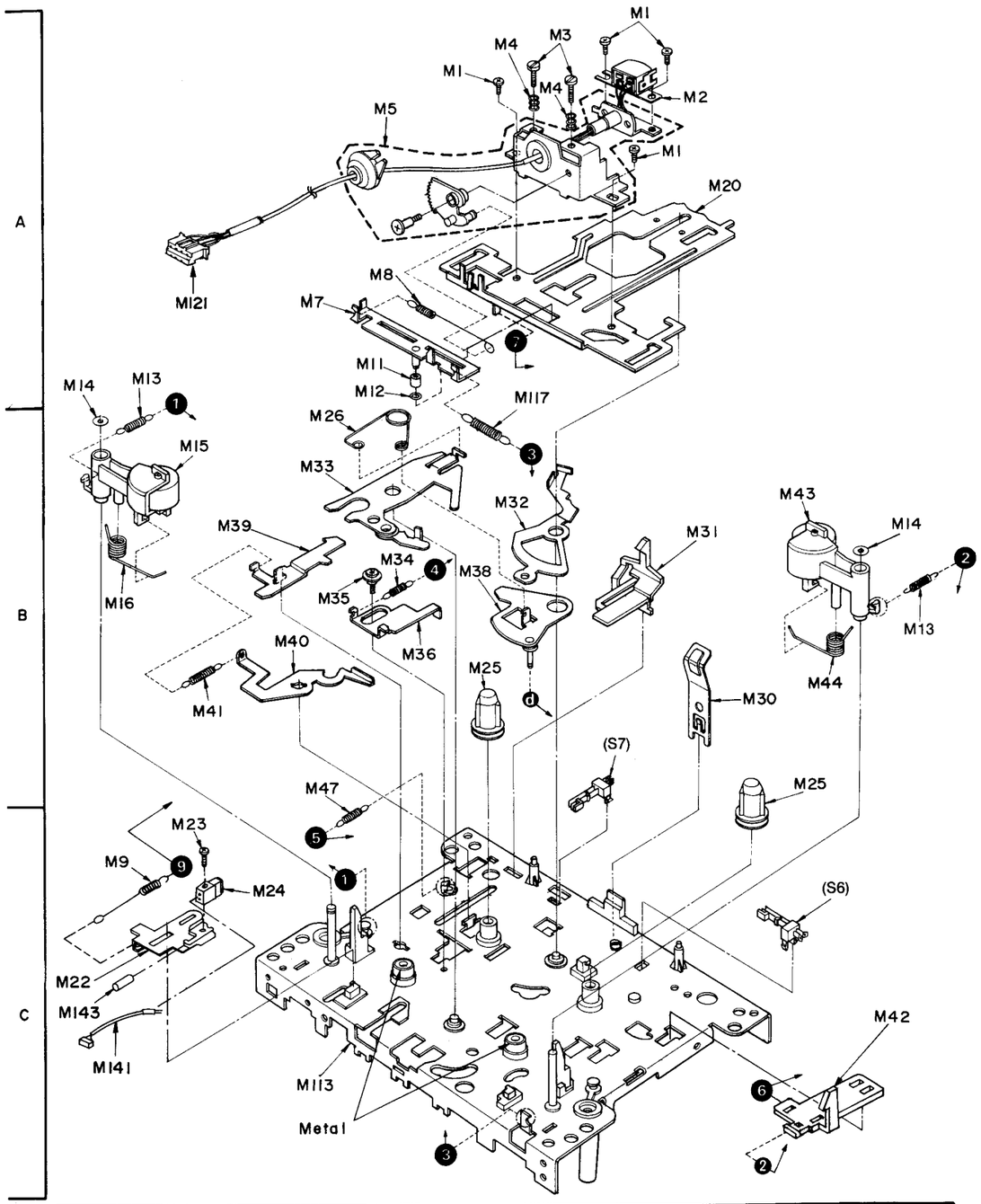

1～20	14 13 16 9 15 7 5 8 11 12 14 4 3 1 1 2 20 14 13
21～40	22 23 39 24 40 26 33 35 34 36 38 25 32 31 30 25
41～	143 141 121 41 113 47 117 43 44 42

(REAR VIEW)

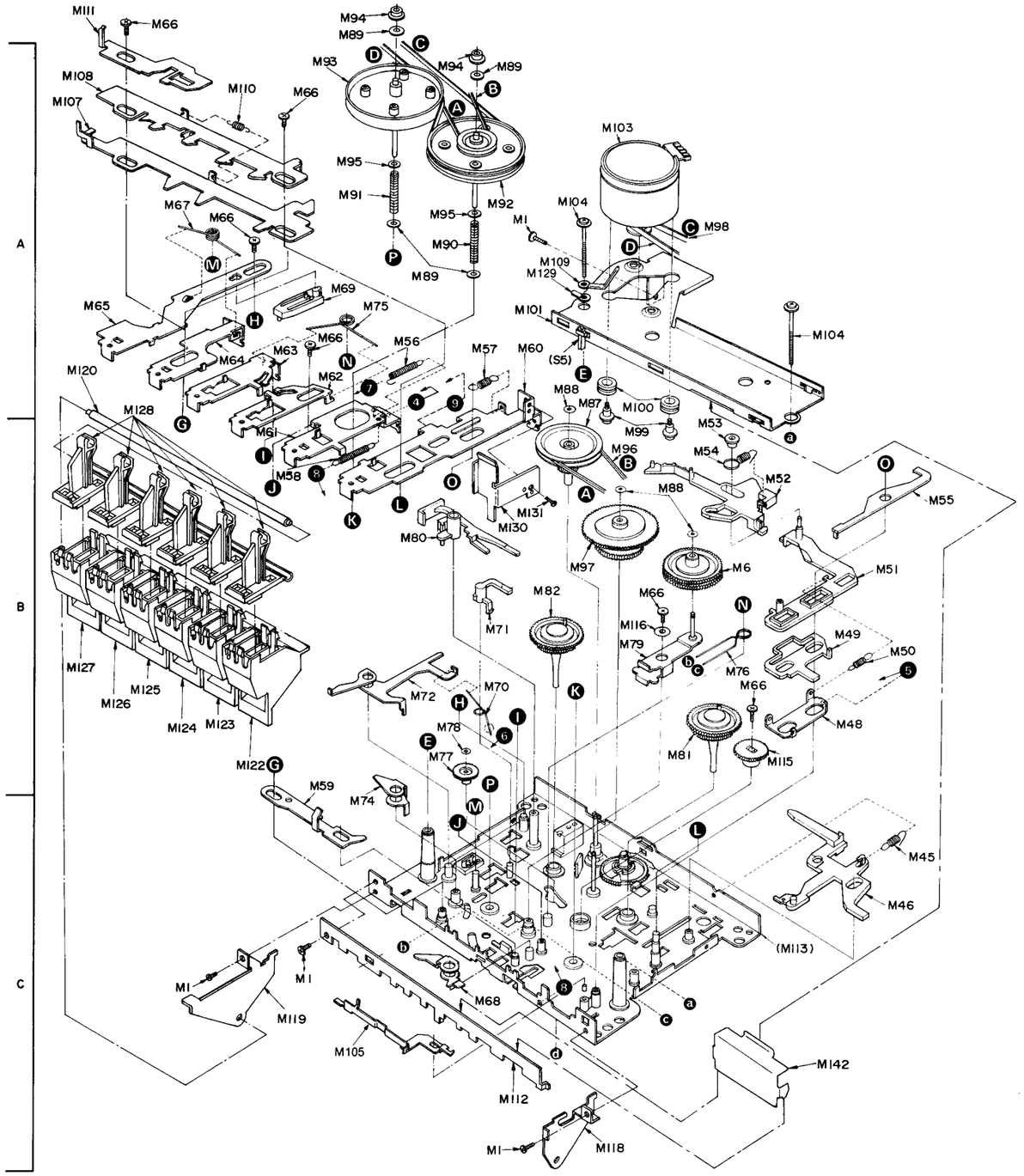

1～50	1 1 1 1 6 48 49 46 45
51～100	65 66 67 66 64 66 63 58 93 59 94 95 69 74 89 72 94 90 77 89 71 60 97 88 87 96 79 98 53 54 52 55 51 50 61 66 62 89 91 75 80 56 95 78 68 92 70 57 82 99 66 81 88 76 66
101～	111 107 127 128 124 110 123 119 105 112 101 109 129 104 103 115 104 108 120 126 125 122 130 131 118 100 116 113 142

• SPRIN

M47
(8.2mm, Φ

M13
(9.8mm, Φ

• SPRIN

Φ4

M67

13mm

19mm

M75 Φ

Specifications

Playback torque	
Fast Forward torque	
Rewind torque	
Pressure of pressure roller	
Wow and flutter	

CHANISM PARTS LOCATION
(REAR VIEW)

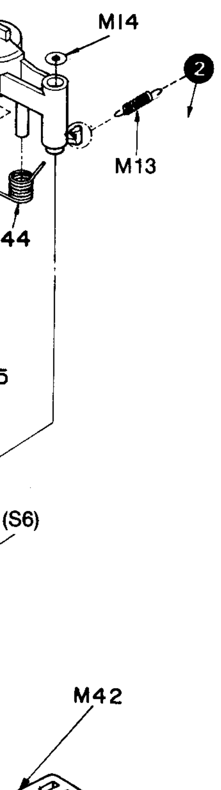

	14	13
43	44	42

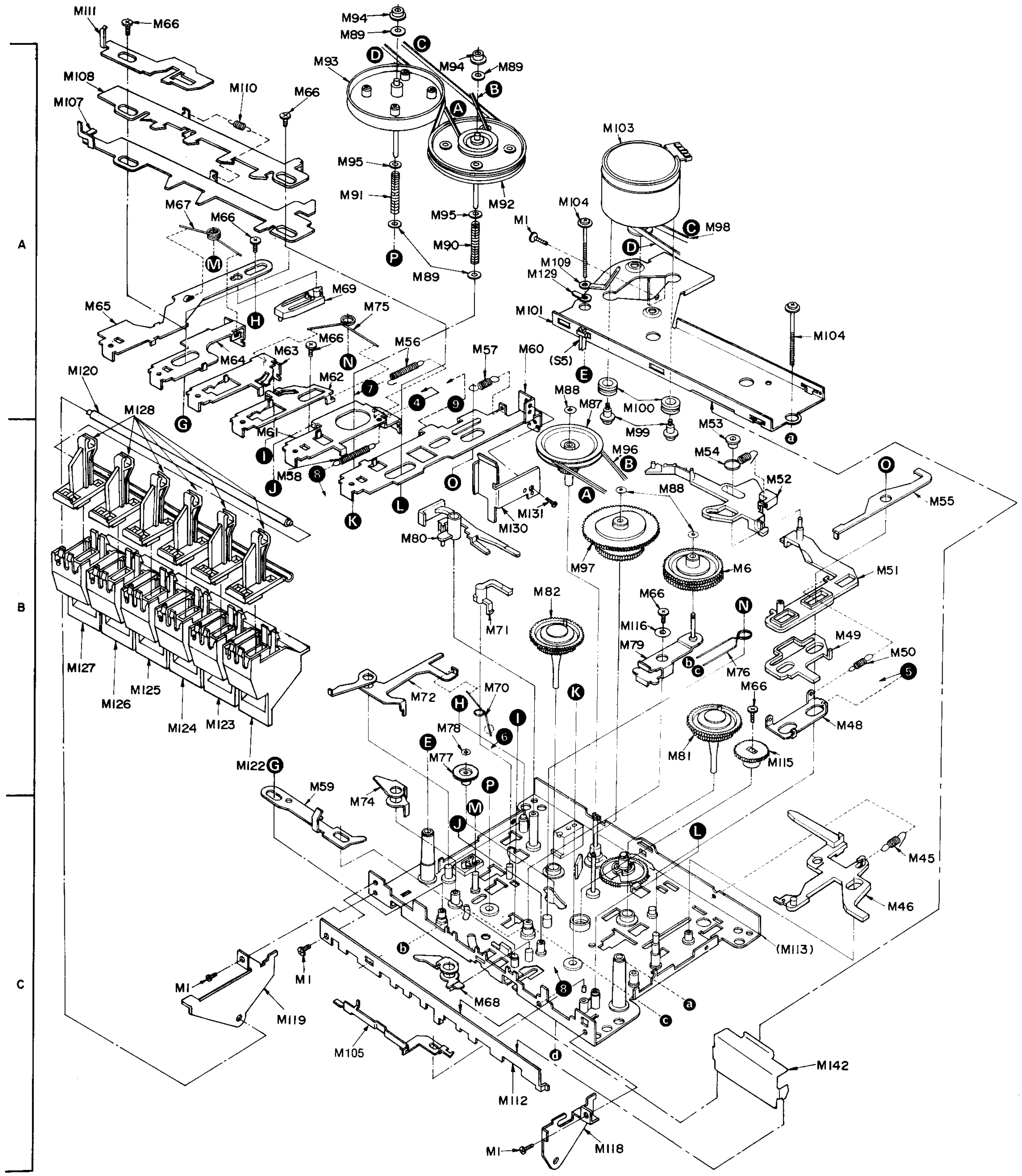

1~50	
51~100	65 66 67 66 64 66 63 58 93 59 94 95 69 74 89 72 94 90 77 89 71 60 97 88 87 96 79 98 53 54 52 55 51 50 / 61 66 62 89 91 75 80 56 95 78 68 92 70 57 82 99 66 81 88 76 66
101~	111 107 127 128 124 110 123 119 105 112 101 109 129 104 103 115 104 / 108 120 126 125 122 130 131 118 100 116 113 142

(Row 1~50: 1 1 1 1 6 48 49 46 45)

• **SPRING LOCATION (Top View)**

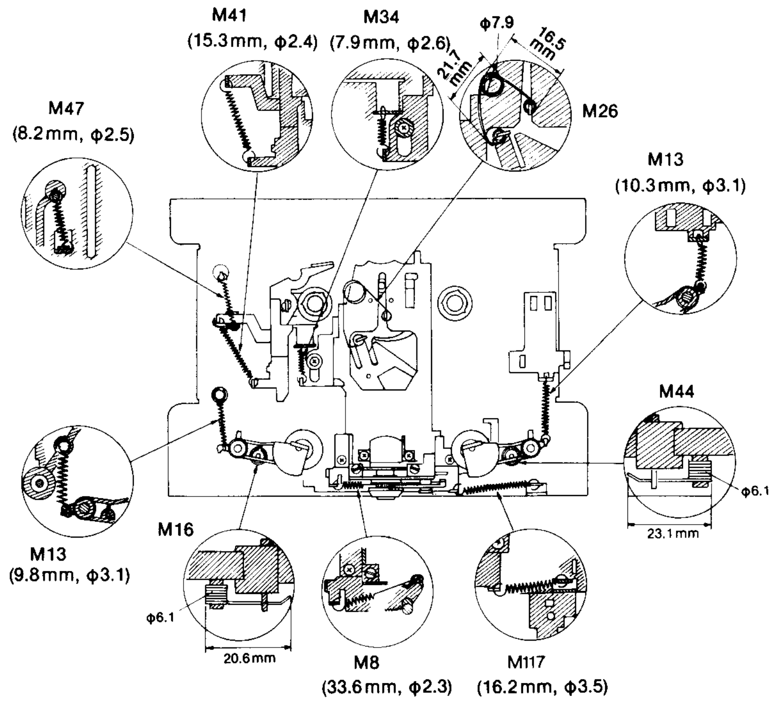

• **SPRING LOCATION (Rear View)**

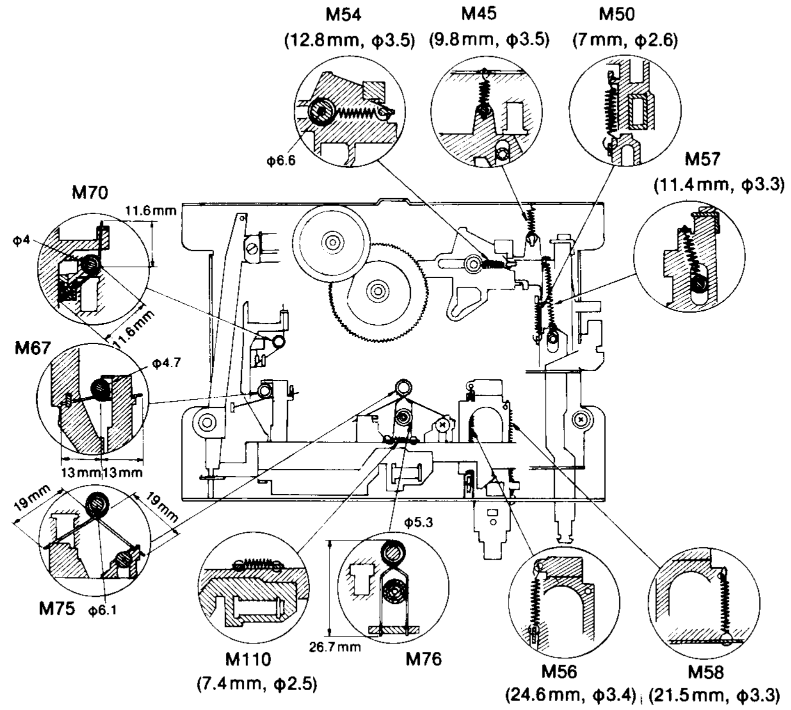

ℓ × D (mm)	
M4	**M90**
4.7×3.2	19.0×3.2
M91	
19.0×3.2	
ℓ × D (mm)	
M8	**M13**
33.6×2.3	9.3×3.1
M34	**M41**
7.9×2.6	15.3×2.4
M45	**M47**
9.9×3.5	8.2×2.5
M50	**M54**
7.0×2.6	12.8×3.5
M56	**M57**
24.6×3.4	11.4×3.3
M58	**M110**
21.5×3.3	7.4×2.5
M117	
16.2×3.5	
ℓ1 Long, ℓ2 Short, ℓ1×ℓ2×D (mm)	
M16	**M26**
20.6×8.0×6.1	21.7×16.5×7.9
M44	**M67**
23.1×8.5×6.1	13.0×13.0×4.7
M70	**M75**
11.6×11.6×4.0	19.0×19.0×6.1
M76	
26.7×26.7×5.3	

Specifications

Playback torque	25~60g · cm
Fast Forward torque	75~135g · cm
Rewind torque	75~135g · cm
Pressure of pressure roller	220~330g
Wow and flutter	Less than 0.2% (WRMS)

Screw Dimensions Quick Reference

• **Dimensions**

XSN 3 + 10 = Pan head machine screw, 3mm in diameter, 10mm long.

Type/Diameter/Length

• **Types**

Precision machine screw	Machine screw	Tapping/Tap-tight machine screw
XQC Flat head	XSB Binding head	XTB Binding head
XQG Oval fillister head	XSC Oval countersunk head	XTC Oval countersunk head
XQH Flat fillister head	XSH Flat fillister head	XTN Pan head
XQS Flat head	XSN Pan head	XTS Flat head
	XSS Flat head	

MEASUREMENTS AND ADJUSTMENTS

■ ALIGNMENT INSTRUCTION

Z ... For all European areas except E F G.
E ... For United Kingdom.
F ... For France.
G ... For F.R. Germany.

READ CAREFULLY BEFORE ATTEMPTING ALIGNMENT

1. Set Fine Tuning control to center.
2. Set volume control to maximum.
3. Set band switch to LW, MW, SW or FM.
4. Set tape selector to normal.
5. Set dolby NR switch to OUT.
6. Set graphic equalizer to center.
7. Set selector/FM mode switch to radio/FM stereo.
8. Set power source voltage to 12V DC.
9. Output of signal generator should be no higher than necessary to obtain an output reading.

■ LW, MW and SW ALIGNMENT

	BAND	SIGNAL GENERATOR or SWEEP GENERATOR: CONNECTIONS	SIGNAL GENERATOR or SWEEP GENERATOR: FREQUENCY	RADIO DIAL SETTING	INDICATOR (ELECTRONICS VOLTMETER or SCOPE)	ADJUSTMENT	REMARKS
		AM-IF ALIGNMENT					
(1)	MW	Fashion loop of several turns of wire and radiate signal into loop of receiver.	455kHz (470kHz ... E only) 30% Mod. at 400Hz	Point of non-interference. (on/about 600kHz)	Output meter across voice coil.	T2 (AM IFT)	Adjust for maximum output.
		LW-RF ALIGNMENT					
(2)	LW	〃	136kHz	Tuning capacitor fully closed.	〃	L7 (LW OSC Coil)	〃
(3)	LW	〃	297kHz	Tuning capacitor fully open.	〃	CT6 (LW OSC Trimmer)	〃
(4)	LW	〃	145kHz	Tune to signal.	〃	(*1) L4-1 (LW ANT Coil)	Adjust for maximum output. Adjust L4-1 by moving coil bobbin along ferrite core.
(5)	LW	〃	285kHz	〃	〃	CT2 (LW ANT Trimmer)	Adjust for maximum output. Repeat steps (2)~(5).
		MW-RF ALIGNMENT					
(6)	MW	〃	511kHz	Tuning capacitor fully closed.	〃	L8 (MW OSC Coil)	Adjust for maximum output.
(7)	MW	〃	1,650kHz	Tuning capacitor fully open.	〃	CT7 (MW OSC Trimmer)	〃
(8)	MW	〃	550kHz	Tune to signal.	〃	(*1) L4-2 (MW ANT Coil)	Adjust for maximum output. Adjust L4-2 by moving coil bobbin along ferrite core.
(9)	MW	〃	1,500kHz	〃	〃	CT3 (MW ANT Trimmer)	Adjust for maximum output. Repeat steps (6)~(9).
	(*1) Cement antenna bobbin with wax after completing alignment.						
		SW-RF ALIGNMENT					
(10)	SW	Connect to test point ▼1 through ceramic capacitor (10pF). Negative side to test point ▼2.	5.75MHz	Tuning capacitor fully closed.	〃	L9 (SW OSC Coil)	Adjust for maximum output.
(11)	SW		18.8MHz	Tuning capacitor fully open.	〃	CT8 (SW OSC Trimmer)	〃
(12)	SW		5.9MHz	Tune to signal.	〃	L2 (SW ANT Coil)	Adjust for maximum output. Repeat steps (10)~(12).

■ FM ALIGNMENT

	BAND	SIGNAL GENERATOR or SWEEP GENERATOR: CONNECTIONS	SIGNAL GENERATOR or SWEEP GENERATOR: FREQUENCY	RADIO DIAL SETTING	INDICATOR (ELECTRONICS VOLTMETER or SCOPE)	ADJUSTMENT	REMARKS
		FM-IF ALIGNMENT					
(1)	FM	High side thru. 0.001μF to test point ▼3. Negative side to test point ▼2.	10.7MHz (SWP.)	Point of non-interference. (on/about 90MHz)	Connect vert. amp. of scope to test point ▼4. Negative side to test point ▼5.	T1 (FM 1st IFT)	Adjust for maximum amplitude. (Refer to fig. 4.)
(2)	FM	〃	〃	〃	〃	T3 (FM 2nd IFT)	Adjust for maximum amplitude. (Refer to fig. 5.)
		FM-RF ALIGNMENT					
(3)	FM	Connect to test point ▼1 through FM dummy antenna. Negative side to test point ▼2.	86.2MHz (87.5MHz... G only)	Variable capacitor fully closed.	Output meter across voice coil.	L6 (FM OSC Coil)	(*2) Adjust for maximum output.
(4)	FM		109.2MHz (108MHz... G only)	Variable capacitor fully open.	〃	CT5 (FM OSC Trimmer)	〃
(5)	FM		106MHz	Tune to signal.	〃	CT1 (FM ANT Trimmer)	(*2) Adjust for maximum output. Repeat steps (3)~(5).
	CT9 adjustment to center before FM-RF ALIGNMENT. (For F.R. Germany) (*2) Three output responses will be present; proper tuning is the center frequency.						

■ SEPARATION ALIGNMENT

ITEM	FM SIGNAL GENERATOR SOURCE CONNECTION	EQUIPMENT CONNECTION ELECTRONIC COUNTER	ADJUSTMENT	SPECIFICATION	REMARKS
Adjustment of pilot signal.	98MHz, 60dB Connect to test point ▼1 through FM dummy antenna. Negative side to test point ▼2.	▼6...(+) ▼7...(−)	VR1	19kHz	Adjust VR1, for 19kHz (±100Hz) reading on electronics counter.

■ TAPE ADJUSTMENT

ITEM	INPUT	MEASUREMENT POINT	SPECIFICATION	ADJUSTMENT POINT	REMARKS
Azimuth (*3)	QZZCFM (8kHz, −20dB)	SP OUT (AC voltmeter & Oscilloscope)	Maximum output.	Azimuth screw	Playback mode FM Mode switch → Stereo (Refer to Fig. 6 & 8)
Tape speed	QZZCWAT (3kHz)	SP OUT (Frequency counter)	3000±90Hz	Motor Volume	Playback mode (Refer to Fig. 7)
Rec bias frequency/ voltage	——	▼8...(+) ▼10...(−)	70±0.5kHz	L10	Record mode Beat proof switch → Stereo Tape selector → CrO_2 (Refer to Fig. 7)
			21±0.5mV	VR2	
Playback gain	QZZCFM (315Hz, 0dB)	LINE OUT	180mV	VR106 (Lch) VR206 (Rch)	Playback mode (FWD)
R/P gain	LINE IN f=1kHz, −10dB	▼12...Lch (+) ▼13...Rch (+) ▼14...(−)	0±1dB	VR500 (Lch) VR600 (Rch)	1. Place UNIT into record mode, and tape selector to normal. 2. Supply 1kHz (−10dB) from AF oscillator to LINE IN. 3. With the reading at Line out during recording at 0dB, adjust the outputs at these points so that they read 0±1dB when the signal recorded in step 2 above is played back. (Refer to Fig. 3)

(*3) Adjust the forward and reverse outputs and inputs to their maximum values and lock the screws in place.

■ ALIGNMENT POINT

* Please refer to Circuit Board and Wiring Connection Diagram of test point locations.

■ AZIMUTH ADJUSTMENT

• To adjustment the azimuth, insert a test tape and play it back in both the forward and reverse direction. During playback in each direction, adjust the respective location indicated by the arrows in the Fig. 1 using a small regular screwdriver.

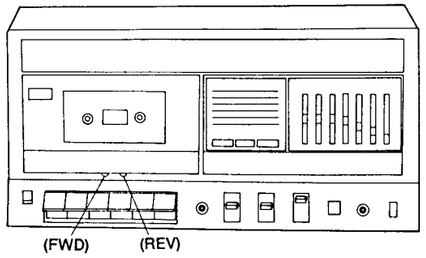

Fig. 1

R/P GA
O± lo
(R c
VR60

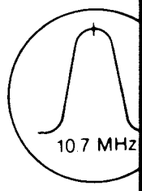

Fig. 4

Rec bia
oscillat

Keep

For France.
For F.R. Germany.

REMARKS
st for maximum ut.
"
"
st for maximum ut. Adjust L4-1 by ng coil bobbin ferrite core.
st for maximum ut. at steps 5).
st for maximum ut.
"
st for maximum ut. Adjust L4-2 by ng coil bobbin ferrite core.
st for maximum ut. at steps 5).
st for maximum ut.
"
t for maximum t. at steps 12).

REMARKS
t for maximum tude. to fig. 4.)
t for maximum tude. to fig. 5.)

	BAND	SIGNAL GENERATOR or SWEEP GENERATOR: CONNECTIONS	SIGNAL GENERATOR or SWEEP GENERATOR: FREQUENCY	RADIO DIAL SETTING	INDICATOR (ELECTRONICS VOLTMETER or SCOPE)	ADJUSTMENT	REMARKS
	FM-RF ALIGNMENT						
(3)	FM	Connect to test point ▼ through FM dummy antenna. Negative side to test point ▼.	86.2MHz (87.5MHz... G only)	Variable capacitor fully closed.	Output meter across voice coil.	L6 (FM OSC Coil)	(*2) Adjust for maximum output.
(4)	FM		109.2MHz (108MHz... G only)	Variable capacitor fully open.	"	CT5 (FM OSC Trimmer)	"
(5)	FM		106MHz	Tune to signal.	"	CT1 (FM ANT Trimmer)	(*2) Adjust for maximum output. Repeat steps (3)~(5).
	CT9 adjustment to center before FM-RF ALIGNMENT. (For F.R. Germany) (*2) Three output responses will be present; proper tuning is the center frequency.						

■ SEPARATION ALIGNMENT

ITEM	FM SIGNAL GENERATOR SOURCE CONNECTION	EQUIPMENT CONNECTION ELECTRONIC COUNTER	ADJUSTMENT	SPECIFICATION	REMARKS
Adjustment of pilot signal.	98MHz, 60dB Connect to test point ▼ through FM dummy antenna. Negative side to test point ▼.	▼...(+) ▼...(−)	VR1	19kHz	Adjust VR1, for 19kHz (±100Hz) reading on electronics counter.

■ TAPE ADJUSTMENT

ITEM	INPUT	MEASUREMENT POINT	SPECIFICATION	ADJUSTMENT POINT	REMARKS
Azimuth (*3)	QZZCFM (8kHz, −20dB)	SP OUT (AC voltmeter & Oscilloscope)	Maximum output.	Azimuth screw	Playback mode FM Mode switch → Stereo (Refer to Fig. 6 & 8)
Tape speed	QZZCWAT (3kHz)	SP OUT (Frequency counter)	3000±90Hz	Motor Volume	Playback mode (Refer to Fig. 7)
Rec bias frequency/ voltage	——	▼...(+) ▼...(−)	70±0.5kHz	L10	Record mode Beat proof switch → Stereo Tape selector → CrO_2 (Refer to Fig. 7)
			21±0.5mV	VR2	
Playback gain	QZZCFM (315Hz, 0dB)	LINE OUT	180mV	VR106 (Lch) VR206 (Rch)	Playback mode (FWD)
R/P gain	LINE IN f=1kHz, −10dB	▼...Lch (+) ▼...Rch (+) ▼...(−)	0±1dB	VR500 (Lch) VR600 (Rch)	1. Place UNIT into record mode, and tape selector to normal. 2. Supply 1kHz (−10dB) from AF oscillator to LINE IN. 3. With the reading at Line out during recording at 0dB, adjust the outputs at these points so that they read 0±1dB when the signal recorded in step 2 above is played back. (Refer to Fig. 3)

(*3) Adjust the forward and reverse outputs and inputs to their maximum values and lock the screws in place.

■ ALIGNMENT POINT

* Please refer to Circuit Board and Wiring Connection Diagram of test point locations.

■ AZIMUTH ADJUSTMENT

- To adjustment the azimuth, insert a test tape and play it back in both the forward and reverse direction. During playback in each direction, adjust the respective location indicated by the arrows in the Fig. 1 using a small regular screwdriver.

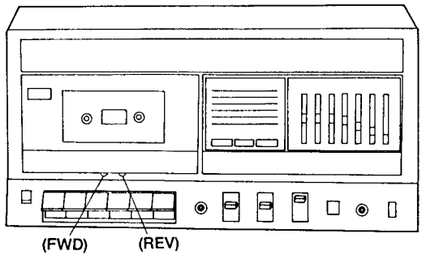

Fig. 1

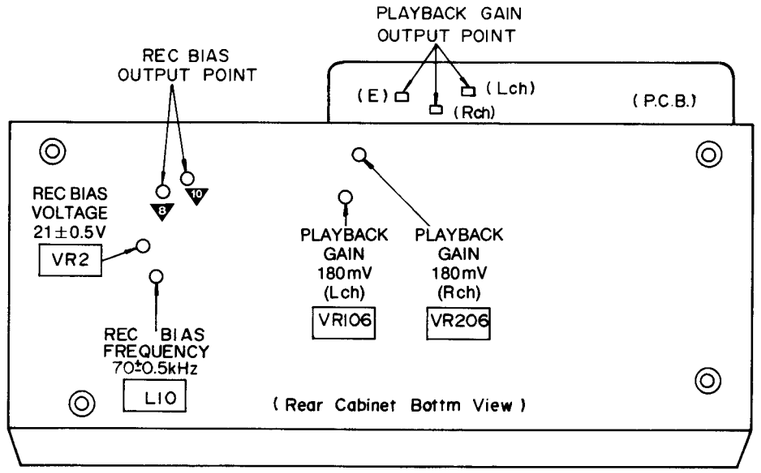

Fig. 2

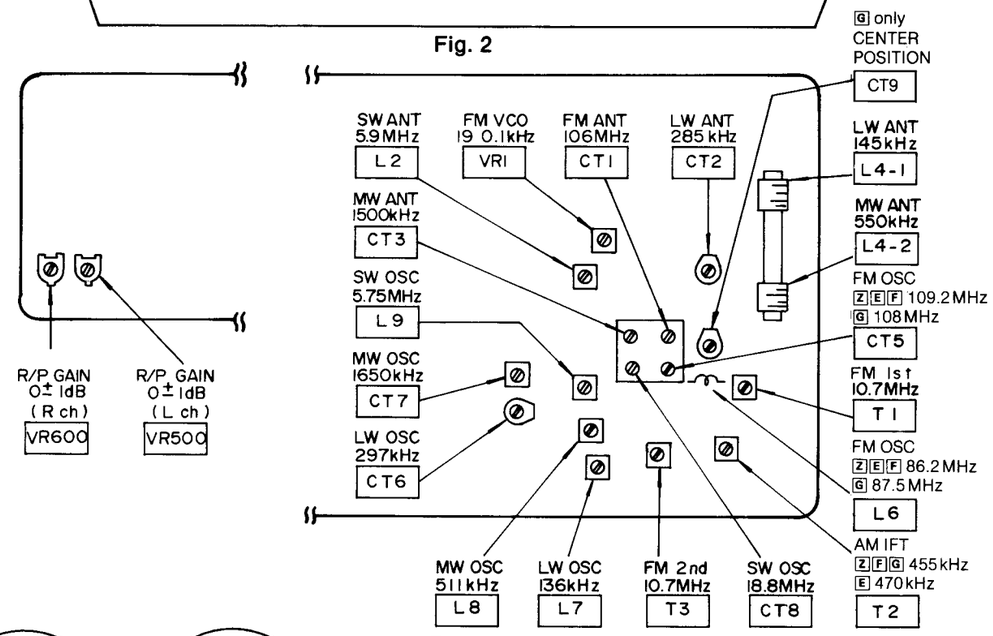

Fig. 3

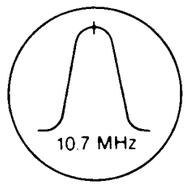

Fig. 4

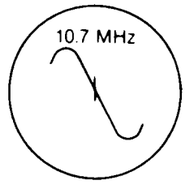

Fig. 5

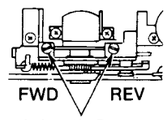

Fig. 6

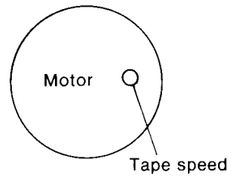

Fig. 7

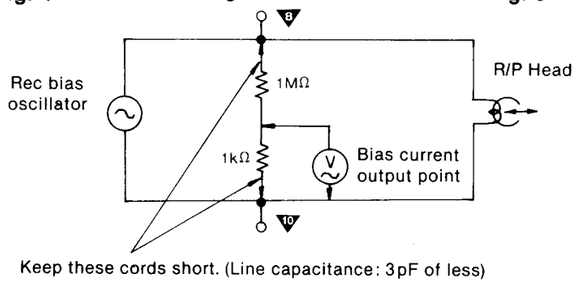

Fig. 8

- In-order not to influence the bias osillation, divide the voltage with 1MΩ and 1kΩ resistors, and measure the voltage across the 1kΩ resistor.

■ MECHANISM PARTS LIST

REPLACEMENT PARTS LIST

The letter in the circle after the part name indicates the color of the part.
Ⓢ... Silver

Ref. No.	Part No.	Part Name & Description
		MECHANICAL PARTS
M 1	XSN2+3	Screw ⊕2×3 (Head, Head Frame etc., M'tg)
M 2	RJH4C34GZ	Head, Record/Playback
M 3	RFE263Z	Screw (Azimuth ADJ.)
M 4	RFS597Z	Spring, Azimuth ADJ.
M 5	RFU84Z	Head Frame Ass'y
M 6	RFK19Z	F.F. Idler Ass'y
M 7	RFY654Z	Slide Plate Ass'y
M 8	RFS598Z	Spring, Slide Plate Ass'y
M 9	RFS663ZA	Spring, Erase Head Holder
M 11	RFX139Z	Collar, (C)
M 12	RFN160Z	Washer, Slide Plate Ass'y
M 13	RFS599Z	Spring, Pinch Rollar Ass'y
M 14	RFN110Z	Washer, Pinch Roller Ass'y
M 15	RFR37Z	Pinch Roller (REV) Ass'y
M 16	RFS600Z	Spring, Pinch Roller (REV) Ass'y
M 20	RFU85Z	Head Base
M 22	RFD294Z	Holder, Erase Head
M 23	XSN17+5	Screw ⊕1.7×5 (Erase Head M'tg)
M 24	RJH2C05YZAM	Erase Head
M 25	RFE257Z	Reel Lug
M 26	RFS601Z	Spring, Reverse
M 30	RFS645ZA	Spring, Cassette Tape Holder
M 31	RFY656Z	Lever, Erase Safety
M 32	RFD257Z	Lever, Reverse (A)
M 33	RFY657Z	Reverse (A) Lever Ass'y
M 34	RFS603Z	Spring, Stopper Plate
M 35	RFE265Z	Screw (Stopper Plate M'tg)
M 36	RFD258Z	Stopper Plate
M 38	RFD259Z	Idler Plate Ass'y
M 39	RFD260Z	Lever, Record Inhibit
M 40	RFD261Z	Lever, MO Coupling
M 41	RFS604Z	Spring, MO Coupling Lever
M 42	RFY704Z	Lever, Latch
M 43	RFR38Z	Pinch Roller (FWD) Ass'y
M 44	RFS605Z	Spring, Pinch Roller (FWD) Ass'y
M 45	RFS606Z	Spring, DR Lever
M 46	RFY659Z	Lever, DR
M 47	RFS607Z	Spring, Mode Plate
M 48	RFD262Z	Plate, Mode
M 49	RFY660Z	Lever, Mode Plate
M 50	RFS608Z	Spring, Mode Plate
M 51	RFY661Z	Lever, Detection
M 52	RFE259Z	Rod, Detection
M 53	RFE260Z	Stopper, Detection Rod
M 54	RFS609Z	Spring, Detection Rod
M 55	RFY705Z	Lever, Release
M 56	RFS610Z	Spring, Head Base
M 57	RFS611Z	Spring, Record Lever
M 58	RFS612Z	Spring, Playback Lever
M 59	RFD264Z	Switch Plate
M 60	RFY706Z	Lever, Record
M 61	RFY707Z	Lever, Playback
M 62	RFY708Z	Lever, Rewind
M 63	RFY709Z	Lever, Fast Forward
M 64	RFY710Z	Lever, Stop/Eject
M 65	RFY732ZA	Lever, Pause
M 66	RFE261Z	Screw (Pause Lever, etc. M'tg)
M 67	RFS613Z	Spring, Pause, Stop/Eject
M 68	RFY669Z	Lever, Cue
M 69	RFY670Z	Arm, Pause Lever
M 70	RFS622Z	Spring, Clutch Lever
M 71	RFX142Z	Clutch Stopper
M 72	RFD296ZA	Plate, Detection Inhibit
M 74	RFY671Z	Arm, Pause
M 75	RFS615Z	Spring, FF/REW Lever
M 76	RFS616Z	Spring, FF/REW Lever
M 77	RFG90Z	Gear, Idler
M 78	RFN162Z	Washer, Idler Gear
M 79	RFD263Z	Fast Forward Idler Plate Ass'y
M 80	RFY672Z	Lever, Detection Inhibit
M 81	RFJ58Z	Reel Table (REV) Ass'y
M 82	RFJ59Z	Reel Table (FWD) Ass'y
M 87	RFQ44Z	Pulley, Drive
M 88	RFN163Z	Washer, FF Idler, Drive Pulley, etc.
M 89	RFN164Z	Washer, Flywheel
M 90	RFS619Z	Spring, Flywheel (REV) Ass'y
M 91	RFS620Z	Spring, Flywheel (FWD) Ass'y
M 92	RFF41Z	Flywheel (REV) Ass'y
M 93	RFF42Z	Flywheel (FWD) Ass'y
M 94	RFE258Z	Collar, Flywheel Ass'y
M 95	RFN116Z	Washer, Flywheel Ass'y
M 96	RFB69Z	Belt, Drive Pulley
M 97	RFQ45Z	Tension Pulley Ass'y
M 98	RFB74Z	Belt, Motor Ass'y
M 99	RFE142Z	Screw (Motor Ass'y M'tg)
M 100	RFI24Z	Cushion, Motor Ass'y
M 101	RFE298Z	Blacket, Flywheel Ass'y
M 103	RFM82Z	Motor Ass'y
M 104	RFE268Z	Screw (Flywheel Blacket M'tg)
M 105	RFD272Z	Switch Plate (D)
M 107	RFY734ZA	Rod, Slide (B)
M 108	RFY733ZA	Rod, Slide (D)
M 109	RFE299Z	Holder, Lead Wire
M 110	RFS617Z	Spring, Slide Rod
M 111	RFD273Z	Switch Plate (B)
M 112	RFD268Z	Plate, Button Holder
M 113	RFU100ZA	Mechanism Base Ass'y
M 115	RFG91Z	Gear, Reverse
M 116	RFX143Z	Washer, F.F. Idler Plate
M 117	RFS618Z	Spring, Slide Plate Ass'y
M 118	RFE334ZA	Button Holder (L)
M 119	RFE301Z	Button Holder (R)
M 120	RFY712Z	Shaft, Button
M 121	RZWXC53FX	R/P Lead Wire Ass'y
M 122	RBC930Z	Button, Record Ⓢ
M 123	RBC931Z	Button, Playback Ⓢ
M 124	RBC932Z	Button, Rewind Ⓢ
M 125	RBC933Z	Button, Fast Forward Ⓢ
M 126	RBC934Z	Button, Stop/Eject Ⓢ
M 127	RBC935Z	Button, Pause Ⓢ
M 128	RNL42Z	Lever, Button
M 129	RFE302Z	Terminal
M 130	RUB445Z	Lever, R/P
M 131	XTN2+5F	Screw, R/P Lever M'tg
M 141	RZWXC53LZ	Erase Lead Wire Ass'y
M 142	RUV778ZA	Cover, Mechanism
M 143	RFE335ZA	Tube

DISASSEMBLY PROCEDURES FOR THE MAJOR MECHANICAL PARTS

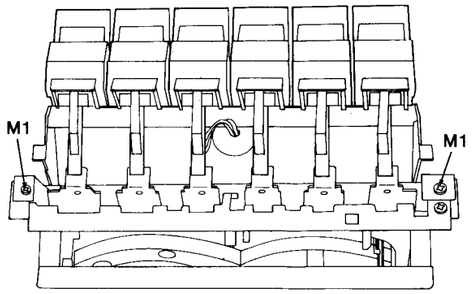

Fig. 1

■ Mechanism Button (Fig. 1)

- Remove the two screws(2×3mm) M1.

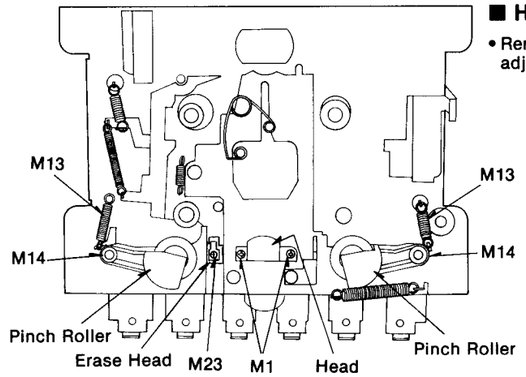

Fig. 2

■ Head (Fig. 2)

- Remove the two screws (2×3mm) M1. (Be sure to adjust the azimuth when reattaching.)

■ Pinch Roller (Fig. 2)

- Remove the pinch roller spring M13.
- Remove the washer M14.

■ Erase Head (Fig. 2)

- Remove the one screw (1.7×5mm) M23.

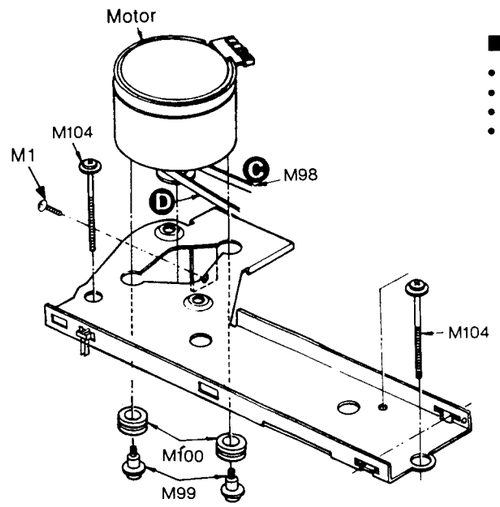

Fig. 3

■ Motor (Fig. 3)

- Remove the one screw (2×3mm) M1.
- Remove the two screws (3×27mm) M104.
- Remove the belt M98.
- Remove the two Screws (3×5mm) M99.

■ Flywheel (Fig. 4)

- Remove the flywheel bracket by removing the motor.
- Pull out the flywheel in the direction of arrow.

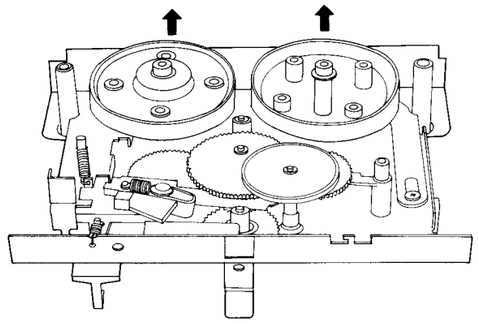

Fig. 4

■ How to Fix Counter

- Insert the counter in the counter angle as shown in the illustration.

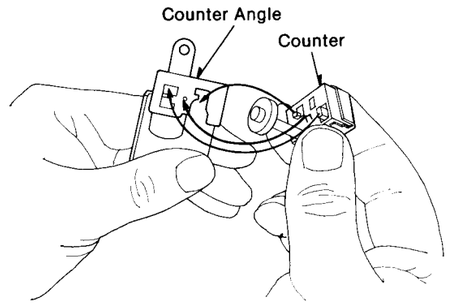

Fig. 5

- Rotate the counter in the direction of the arrow and secure to the counter angle.

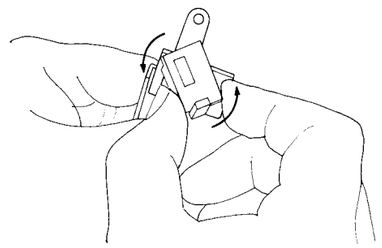

Fig. 6

D

CABINET PARTS LOCATION

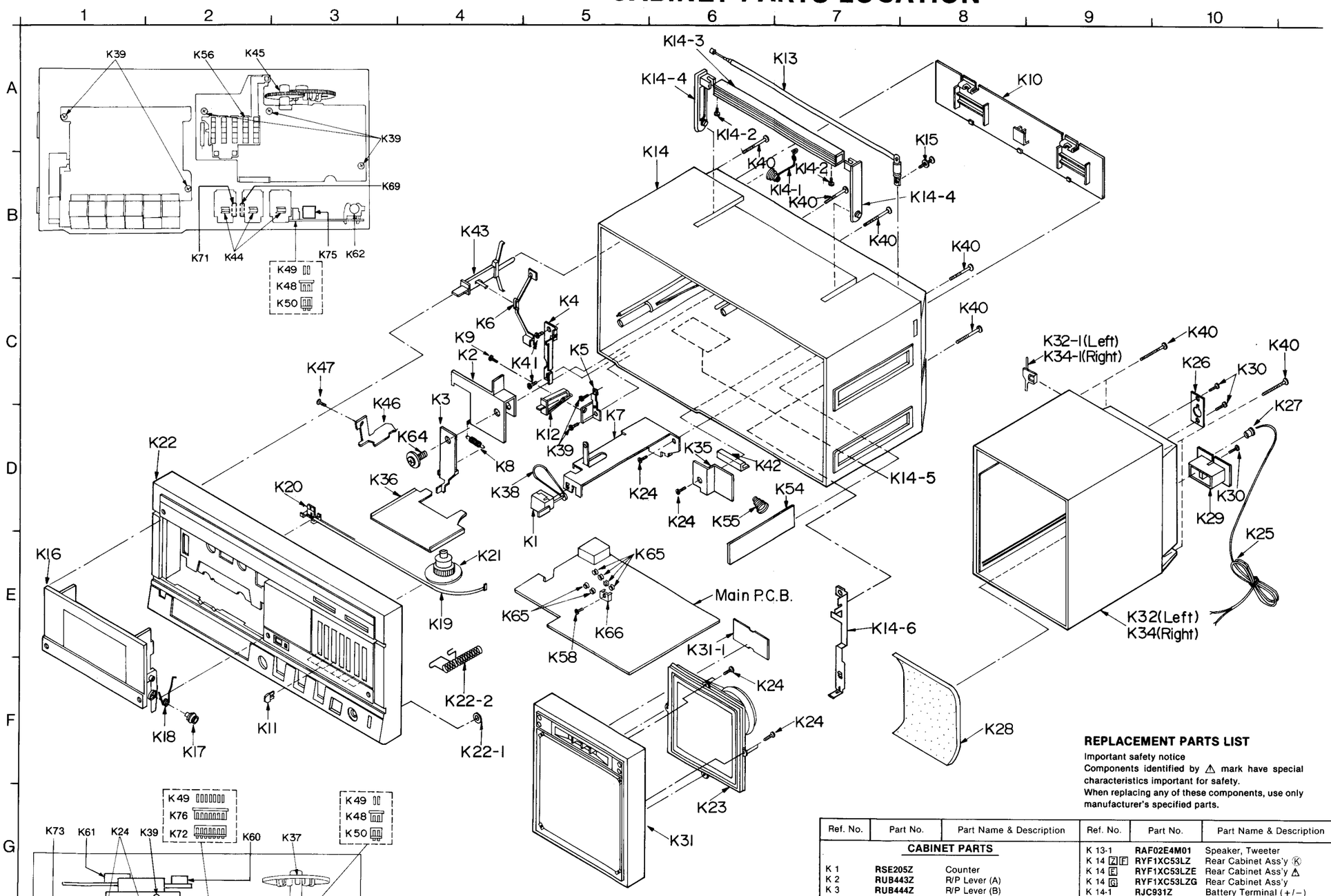

REPLACEMENT PARTS LIST

Important safety notice
Components identified by ⚠ mark have special characteristics important for safety.
When replacing any of these components, use only manufacturer's specified parts.

Ref. No.	Part No.	Part Name & Description
		CABINET PARTS
K 1	RSE205Z	Counter
K 2	RUB443Z	R/P Lever (A)
K 3	RUB444Z	R/P Lever (B)
K 4	RUB446ZB	R/M Angle
K 5	RUB447Z	Angle, R/M Knob
K 6	RUB448ZB	Direction Lever
K 7	RUB449Z	Angle, Counter
K 8	RUD67Z	Spring (R/P Lever)
K 9	RHD05D1Z	Shaft, (R/M Knob)
K 10	RKK244Z	Cover, Battery Ⓚ
K 11	RBD248X	Knob, G. EQ Control Ⓢ
K 12	RBD414Z	Knob, R/M Ⓚ
K 13	XEARR225DAY	Telescopic Antenna
K 13-1	RAF02E4M01	Speaker, Tweeter
K 14 Z F	RYF1XC53LZ	Rear Cabinet Ass'y Ⓚ
K 14 E	RYF1XC53LZE	Rear Cabinet Ass'y ⚠
K 14 G	RYF1XC53LZG	Rear Cabinet Ass'y
K 14-1	RJC931Z	Battery Terminal (+/−)
K 14-2	XTC3+10CFY	Screw ⊕3×10 (Handle M'tg)
K 14-3	RKX323Z7	Handle Ⓚ
K 14-4	RKX361Z	Arm, Handle Ⓢ
K 14-5 Z F	RGT1263ZA	Name Plate Ⓚ
K 14-5 E	RGT1264ZA	Name Plate Ⓚ
K 14-5 G	RGT1264YA	Name Plate Ⓚ
K 14-6	RJT1055ZA	Terminal, Telescopic Antenna

Ref. No.	Part No.	Part Name & Description
K 15	XYN3+F15FY	Screw ⊕3×15 (Telescopic Antenna M'tg)
K 16	RYQXC53FX	Cassette Compartment Ass'y Ⓚ
K 17	RDG5782Z	Gear, Dumper
K 18	RUS689Z	Spring, Cassette Cover
K 19	RDE159Z	Rack, Dial Pointer
K 20	RDP320ZA	Pointer, Dial
K 21	RBT274Z	Knob, Tuning Ⓚ
K 22 Z F	RYM1XC53LZ	Front Cabinet Ass'y Ⓚ
K 22 E	RYM1XC53LZE	Front Cabinet Ass'y ⚠
K 22 G	RYM1XC53LZG	Front Cabinet Ass'y
K 22-1	RHG728ZA	Rubber, Microphone
K 22-2	RUW87ZA	Spring, Earth
K 23	EAS10S05C	Speaker
K 24	XTV3+10G	Screw ⊕3×10 (Speaker M'tg)
K 25	RJE175Y	Speaker Cord
K 26	RUL661Z	Speaker Wall Mounts
K 27	RHG3011Z	Bushing, Speaker Cord
K 28	RHS957Z	Acoustic Material
K 29	RKE512Z4	Holder, Speaker Cord
K 30	XTV3+12G	Screw ⊕3×12 (Speaker Wall Mounts M'tg)
K 31	RYM2XC53T	Speaker Grill Ass'y Ⓚ
K 31-1	RAF02E4M01	Speaker, Tweeter
K 32	RYF2XC53FX	Speaker Rear Cabinet Ass'y (L) Ⓚ
K 32-1	RGE76X	Stopper (R) Ⓚ
K 34	RYF3XC53LZ	Speaker Rear Cabinet Ass'y (R) Ⓚ
K 34-1	RGE76YB	Stopper (L) Ⓚ
K 35	RUV759Z	Cover, Safety
K 36	RMC1070YA	Shield Plate
K 37	RDG5864Z	Gear, Tuning
K 38	RDV34Z	Belt, Counter
K 39	XTV3+12G	Screw ⊕3×12 (R/M Knob Angle, Mechanism, Graphic EQ, P.C.B., etc. M'tg)
K 40	XTV3+50G	Screw ⊕3×50 (Front Cabinet, Speaker Grill Ass'y M'tg)
K 41	XTW3+12Q	Screw ⊕3×12 (R/M Angle)
K 42	RHG2108Z	Rubber, Rear Cabinet Ass'y
K 43	RBC929Z	Button, Direction Ⓥ
K 44	RBD398Y	Knob, Tape Selector, Selector/FM Mode, Band Ⓢ
K 45	RBT275Z	Knob, Fine Tuning Ⓚ
K 46	RUB445ZB	R/P Lever
K 47	XTN2+5F	Screw ⊕2×5 (R/P Lever M'tg)
K 48	RJS2L3Z	Socket (2 pin/CS1, 5)
K 49	RJT707Z	Terminal, Socket
K 50	RJP2G4Y	Plug (2 pin/CP1, 5)
K 54 Z E F	RUP2207ZAN	P.C.B. (Battery Terminal)
K 54 G	RUP2207YAN	P.C.B. (Battery Terminal)
K 55	RJC511Z	Terminal Battery (−)
K 56	RMZ170Z	LED Cover
K 57	RMY218Z	Heat Sink (for IC5)
K 58	XTV3+6F	Screw ⊕3×6 (IC5, Q4 M'tg)
K 59	XYN26+C6	Screw ⊕2.6×6 (Dial Drum M'tg)
K 60	RJP5G18Z	Plug (5 pin/CS700)
K 61	RJP7G18ZA	Plug (7 pin/CS701)
K 62	RJM164Z	Condenser Microphone
K 64	XTWS3+10Q	Screw ⊕3×10 (R/P Lever (A), (B) M'tg)
K 65	RJF28Z	Holder, Fuse ⚠
K 66	RMY189Z	Heat Sink (for Q4)
K 67	RDG5755Z	Drum, Dial
K 69	1JSAC53ZA3	Socket Ass'y (5 pin/CS700)
K 71	1JSAC53ZA4	Socket Ass'y (7 pin/CS701)
K 72	RJP7G4Y	Socket (7 pin/CP2)
K 73	RJP2G18ZA	Plug (2 pin/CP4)
K 74	RJP4G18ZA	Plug (4 pin/CP3)
K 75	RBC1056ZA	Button, Dolby Ⓢ
K 76	RJS7L3ZAX	Socket (7 pin/CS2)
K 79	RUB470Z	Angle, Dolby P.C.B.
		ACCESSORIES
A 1	RQX4908ZA	Operating Instructions
A 2 E	RJA86ZAK	Power Cord, AC ⚠
A 2 Z F G	RJA20Z	Power Cord, AC ⚠
		PACKINGS
P 1	RPN9530YA	Pad, Set
P 2	RPK2407ZA	Gift Box
P 3	RPP762ZAR	Polyethylene Cover
P 4	RPN5075ZA	Pad, Cassette Compartment

Notes:

1. **The letter in round brackets in the Ref. No. column indicates the shipping destination.**
   - Z.....For all European areas except E, F, G.
   - E.....For United Kingdom.
   - F.....For France.
   - G .....For F.R. Germany.
2. **The letter in the circle after the part name indicates the color of the part. Ⓚ...Black, Ⓢ...Silver, Ⓥ...Violet**

GAD H.Y Z E F G Printed in Japan Ⓗ